11 FLOOR PLANS OF RESIDENTIAL PROPERTIES IN THE DEVELOPMENT
發展項目的住宅物業的樓面平面圖

HOUSE 1
1 號洋房

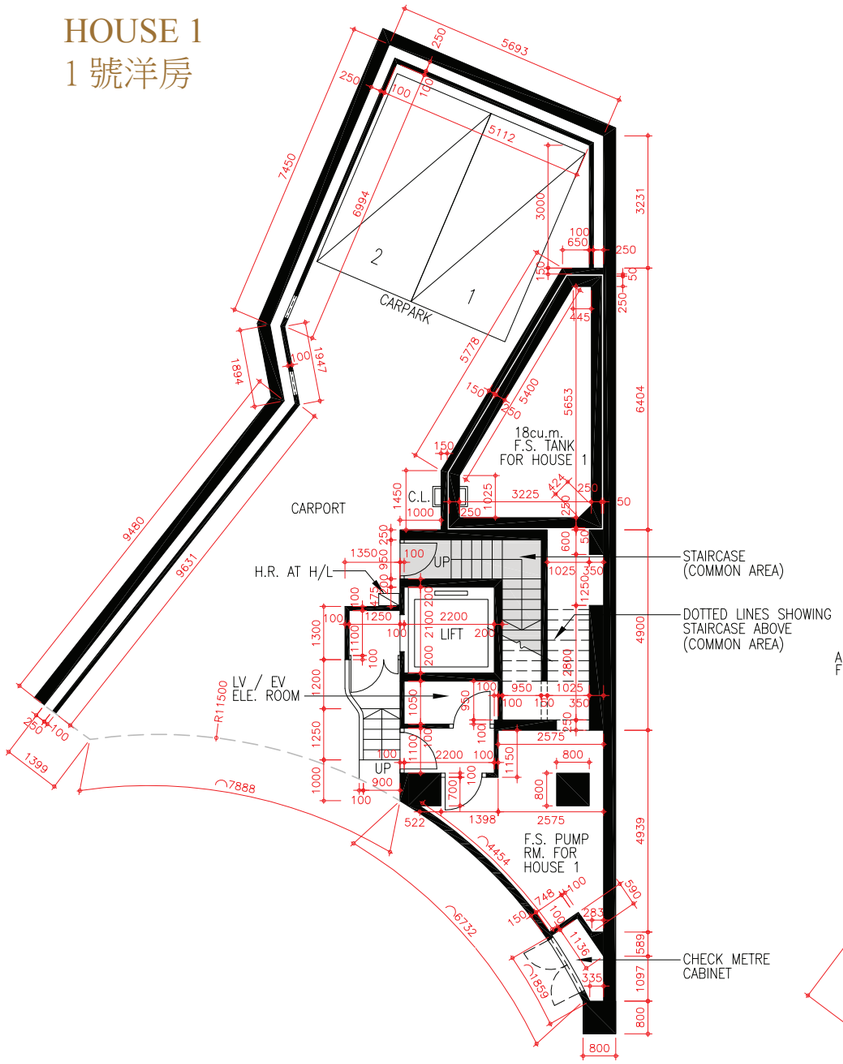

LOWER GROUND FLOOR PLAN
地下低層平面圖

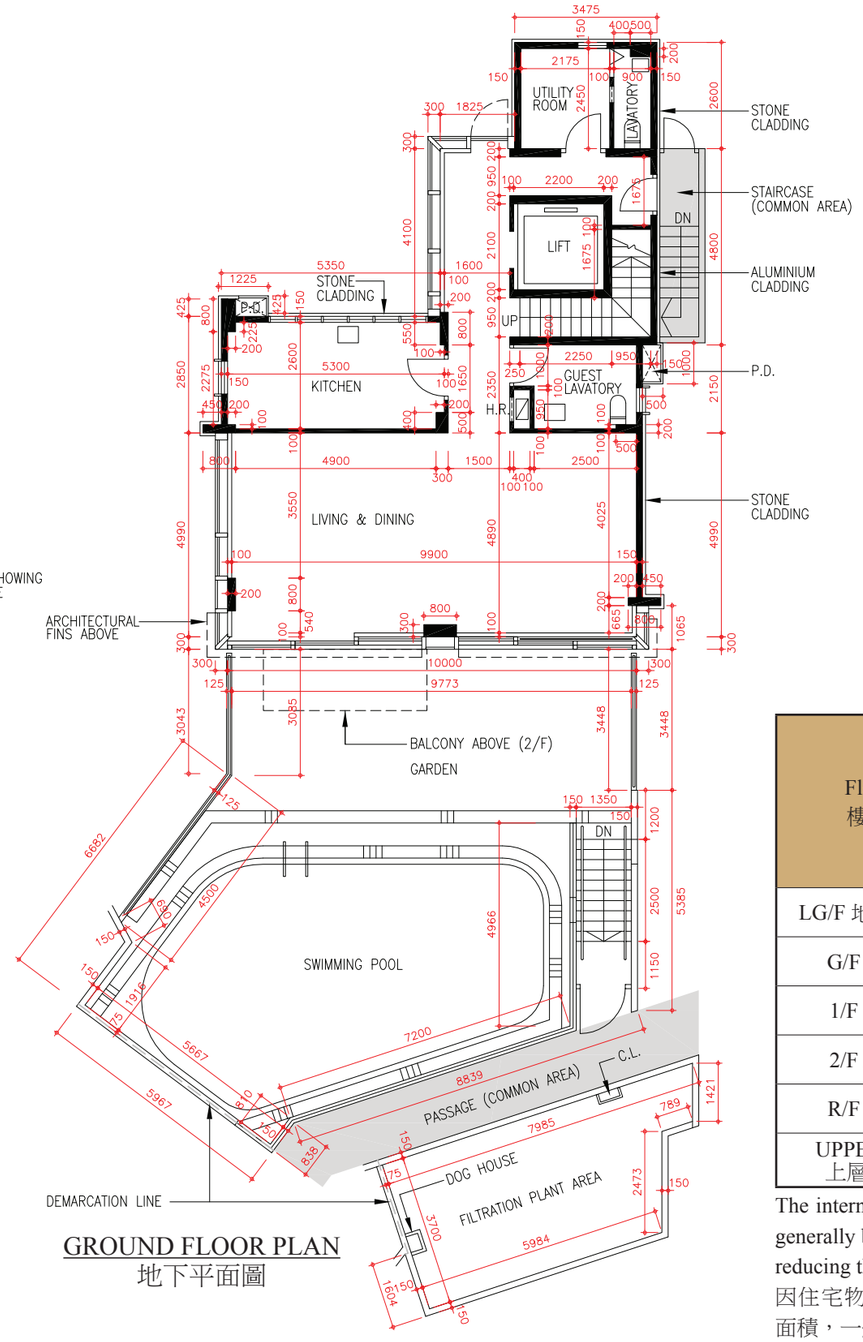

GROUND FLOOR PLAN
地下平面圖

N

Floor 樓層	Thickness of Floor Slabs (Excluding Plaster) of House 1 (mm) 1 號洋房的樓板 (不包括灰泥) 的厚度 (毫米)	Floor-to-Floor Height of House 1 (m) 1 號洋房 層與層之間的 高度 (米)
LG/F 地下低層	250	4.0
G/F 地下	550	4.5
1/F 一樓	150	3.3
2/F 二樓	150	3.5
R/F 天台	150	3.5
UPPER R/F 上層天台	N/A 不適用	N/A 不適用

The internal areas of the residential properties on the upper floors will generally be slightly larger than those on the lower floors because of the reducing thickness of the structural walls on the upper floors.
因住宅物業的較高樓層的結構牆的厚度遞減，較高樓層的內部面積，一般比較低樓層的內部面積稍大。

0 5M米
Scale 比例

Note 備註:
- The dimensions of floor plans are all structural dimensions in millimetre.
  平面圖之尺規所列數字為以毫米標示之建築結構尺寸。
- Please refer to page 46 of this sales brochure for legend of the terms and abbreviations shown on the floor plans above.
  以上平面圖所顯示之名詞及簡稱請參閱本售樓說明書第46頁。

11 FLOOR PLANS OF RESIDENTIAL PROPERTIES IN THE DEVELOPMENT
發展項目的住宅物業的樓面平面圖

LATEST FLOOR PLAN
現狀樓面平面圖

HOUSE 1
1 號洋房

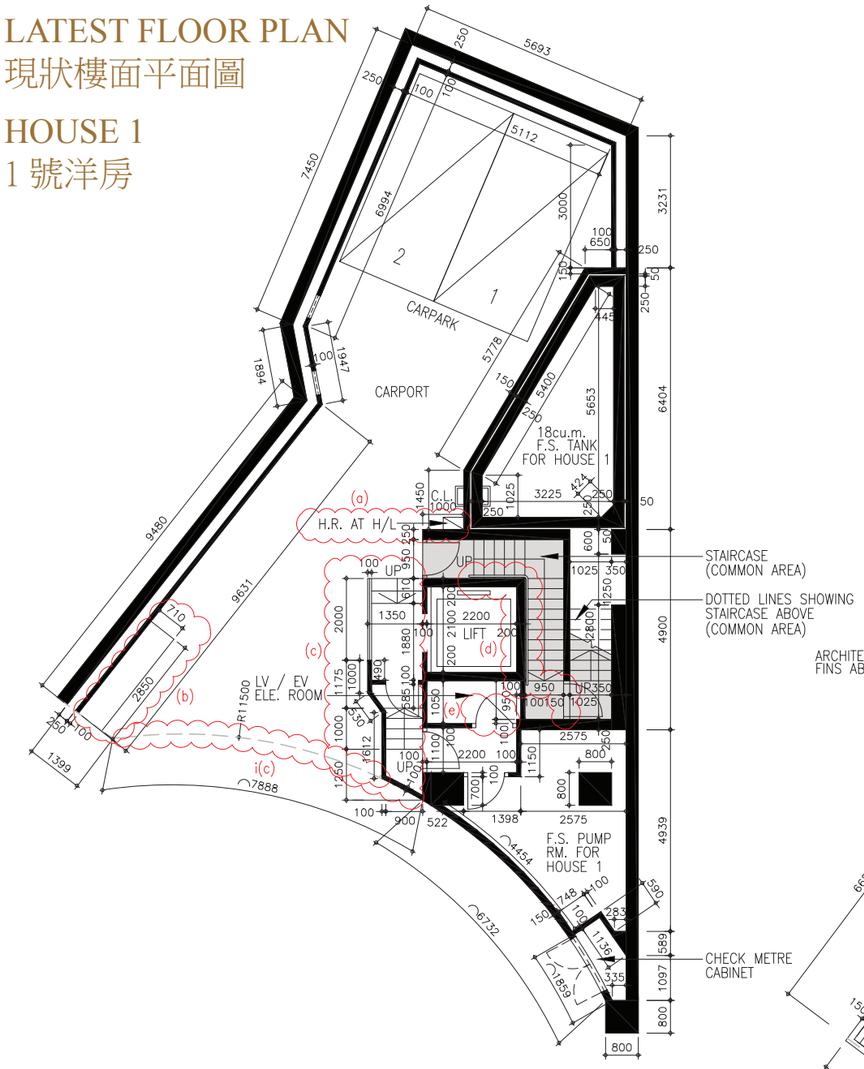

LOWER GROUND FLOOR PLAN
地下低層平面圖

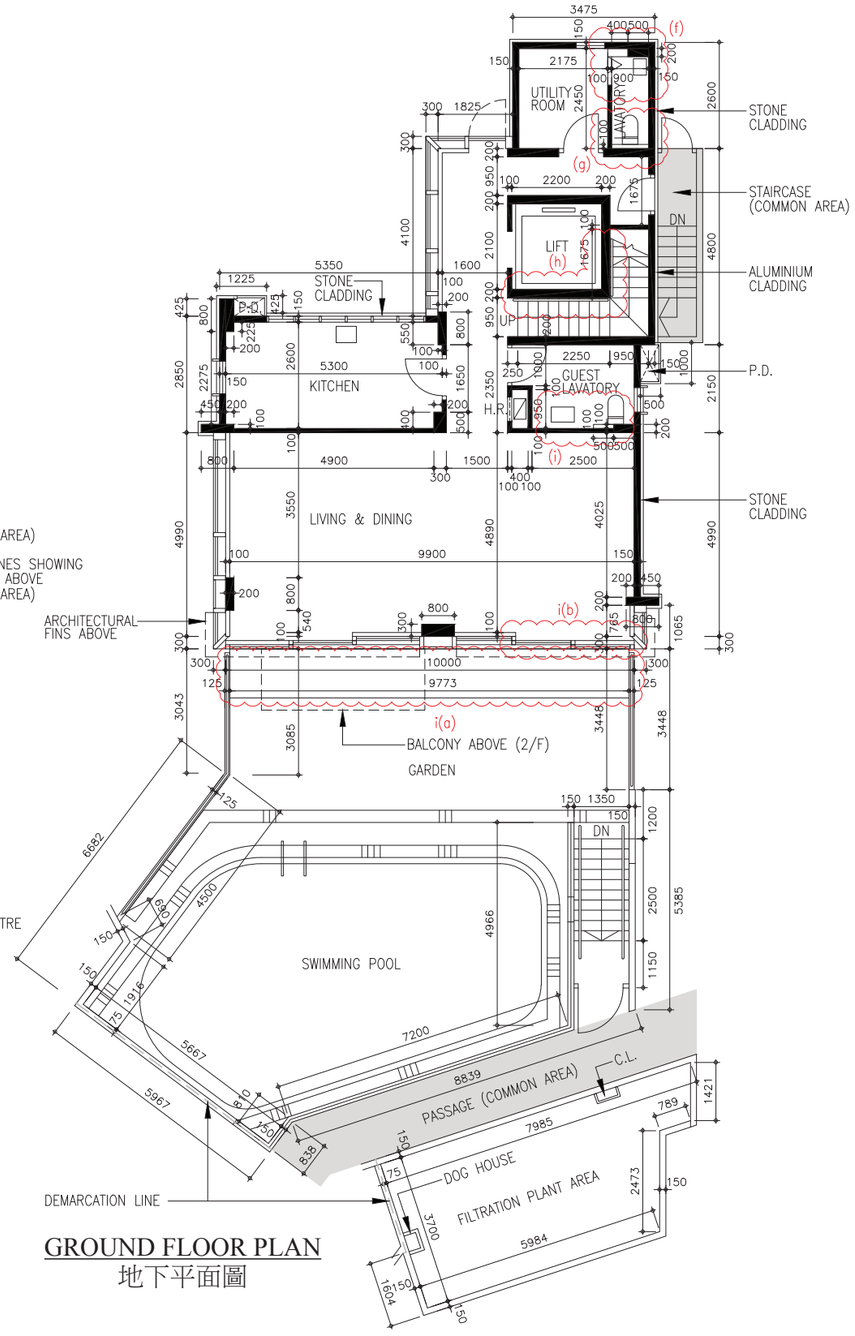

GROUND FLOOR PLAN
地下平面圖

N

House 1 has been altered by way of exempted works and minor works under the Buildings Ordinance after completion of the Development. The approximate locations of the alterations are indicated on the latest floor plans and the details of the alterations are set out below (the below numberings refer to the marked alterations on the plan):

a. Relocation of hose reel.
b. Addition of new road curb.
c. Alteration of lift lobby design.
d. Alteration of handrail design, addition of new metal door and threshold.
e. Alteration of door leaf swing angle.
f. Relocation of wash basin, addition of new furring wall, relocation of aluminium folding door and relocation of louvre on wall.
g. Addition of new furring wall.
h. Alteration of handrail design.
i. Relocation of wash basin and addition of new furring wall.
i(a). Addition of new stone floor paving in garden.
i(b). Removal of concrete curb and non barrier glass balustrade.
i(c). Addition of new roller shutter.

1 號洋房在發展項目落成後進行獲《建築物條例》豁免及小型工程。該等改動的位置於現狀樓面平面圖中標出。該等改動列出如下(下文編號對應圖中改動編號)：

a. 更改消防喉轆位置。
b. 加建新路緣石。
c. 更改電梯大堂設計。
d. 更改扶手設計、加建新金屬門及門檻。
e. 更改門頁可擺動角度。
f. 更改洗手盆位置、加建新填充牆、更改鋁摺門位置及更改牆上百葉位置。
g. 加建新填充牆。
h. 更改扶手設計。
i. 更改洗手盆位置及加建新填充牆。
i(a). 加建花園新石鋪地台。
i(b). 移除混凝土壆及非屏障玻璃欄杆。
i(c). 加建新捲閘。

0 5M米
Scale 比例

Note 備註:

- The dimensions of floor plans are all structural dimensions in millimetre.
  平面圖之尺規所列數字為以毫米標示之建築結構尺寸。
- Please refer to page 46 of this sales brochure for legend of the terms and abbreviations shown on the floor plans above.
  以上平面圖所顯示之名詞及簡稱請參閱本售樓說明書第46頁。

11 FLOOR PLANS OF RESIDENTIAL PROPERTIES IN THE DEVELOPMENT
發展項目的住宅物業的樓面平面圖

HOUSE 1
1 號洋房

N

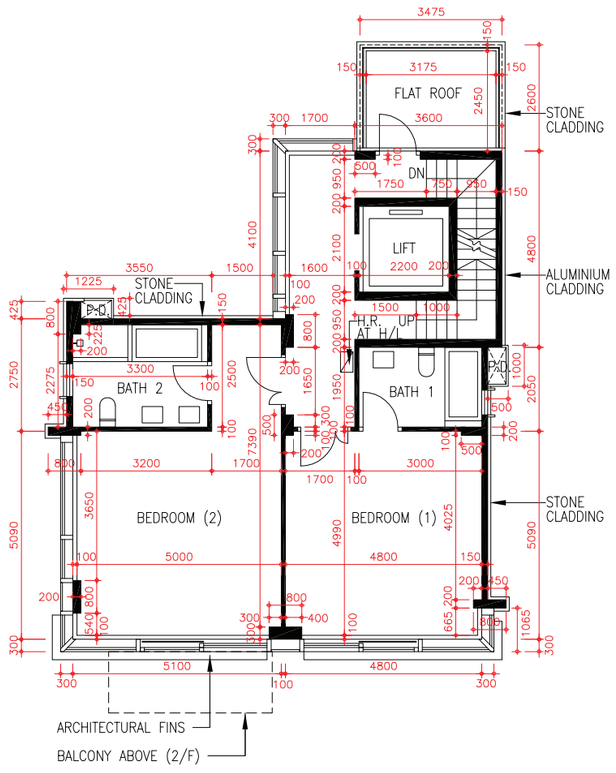

FIRST FLOOR PLAN
一樓平面圖

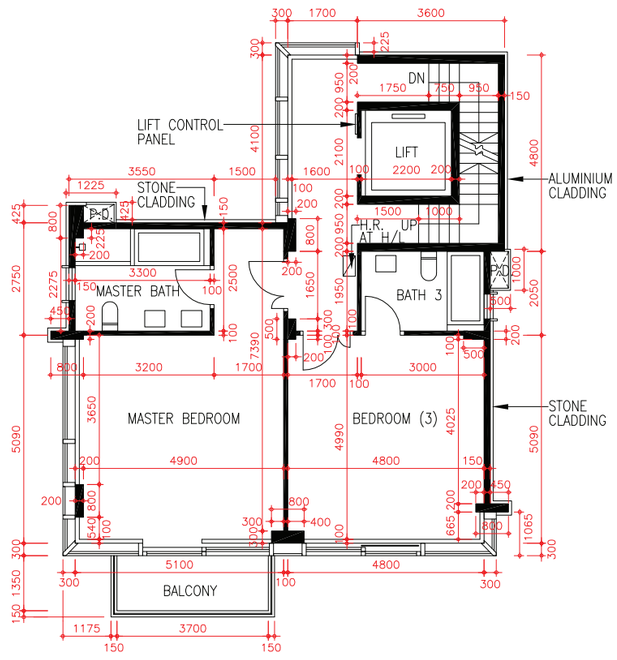

SECOND FLOOR PLAN
二樓平面圖

Note 備註:

- The dimensions of floor plans are all structural dimensions in millimetre.
  平面圖之尺規所列數字為以毫米標示之建築結構尺寸。
- Please refer to page 46 of this sales brochure for legend of the terms and abbreviations shown on the floor plans above.
  以上平面圖所顯示之名詞及簡稱請參閱本售樓說明書第46頁。

0 5M米
Scale 比例

11 | FLOOR PLANS OF RESIDENTIAL PROPERTIES IN THE DEVELOPMENT
發展項目的住宅物業的樓面平面圖

LATEST FLOOR PLAN
現狀樓面平面圖

HOUSE 1
1 號洋房

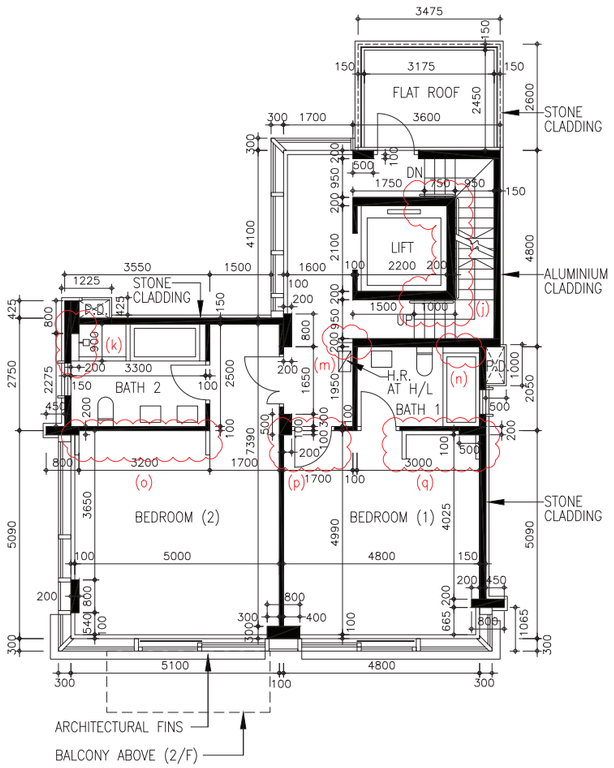

FIRST FLOOR PLAN
一樓平面圖

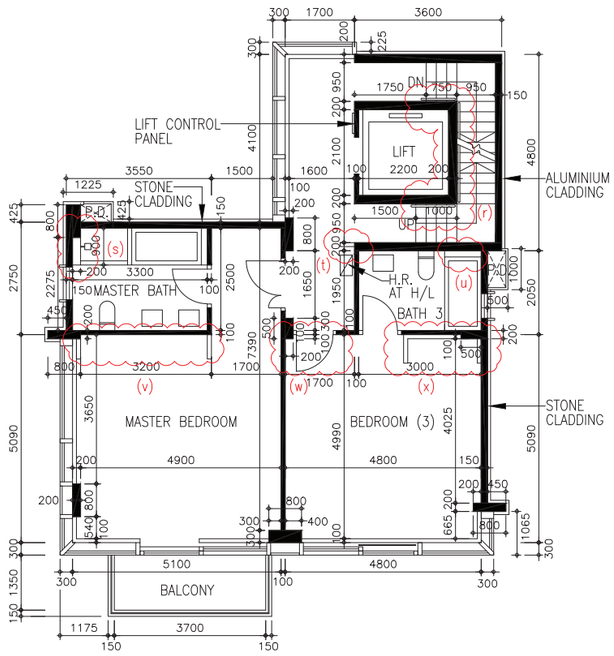

SECOND FLOOR PLAN
二樓平面圖

House 1 has been altered by way of exempted works and minor works under the Buildings Ordinance after completion of the Development. The approximate locations of the alterations are indicated on the latest floor plans and the details of the alterations are set out below (the below numberings refer to the marked alterations on the plan):

j. Alteration of handrail design.
k. Addition of new furring wall and relocation of shower mixer for shower cubicle.
m. Erection of new hose reel cabinet partition.
n. Relocation of shower mixer for bathtub.
o. Erection of new closet partition.
p. Alteration of one & half door to single door.
q. Addition of new furring wall.
r. Alteration of handrail design.
s. Addition of new furring wall and relocation of shower mixer for shower cubicle.
t. Erection of new hose reel cabinet partition.
u. Relocation of shower mixer for bathtub.
v. Erection of new closet partition.
w. Alteration of one & half door to single door.
x. Erection of new closet partition.

1 號洋房在發展項目落成後進行獲《建築物條例》豁免及小型工程。該等改動的位置於現狀樓面平面圖中標出。該等改動列出如下(下文編號對應圖中改動編號)：

j. 更改扶手設計。
k. 加建新填充牆及更改淋浴間花灑水龍頭位置。
m. 豎立新消防喉轆櫃側板。
n. 更改浴缸花灑水龍頭位置。
o. 豎立新衣櫃側板。
p. 更改子母門至單掩門。
q. 加建新填充牆。
r. 更改扶手設計。
s. 加建新填充牆及更改淋浴間花灑水龍頭位置。
t. 豎立新消防喉轆櫃側板。
u. 更改浴缸花灑水龍頭位置。
v. 豎立新衣櫃側板。
w. 更改子母門至單掩門。
x. 豎立新衣櫃側板。

0 5M米
Scale 比例

Note 備註:

- The dimensions of floor plans are all structural dimensions in millimetre.
  平面圖之尺規所列數字為以毫米標示之建築結構尺寸。
- Please refer to page 46 of this sales brochure for legend of the terms and abbreviations shown on the floor plans above.
  以上平面圖所顯示之名詞及簡稱請參閱本售樓說明書第46頁。

11 FLOOR PLANS OF RESIDENTIAL PROPERTIES IN THE DEVELOPMENT
發展項目的住宅物業的樓面平面圖

HOUSE 1
1 號洋房

N

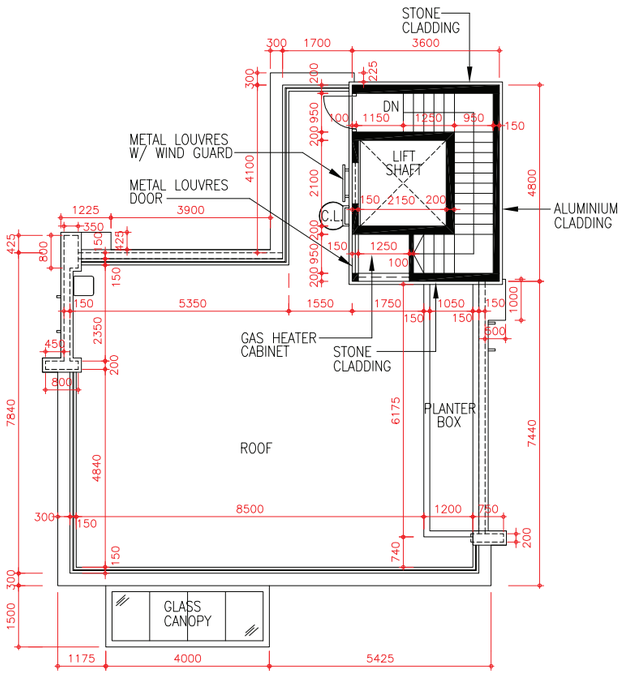

ROOF PLAN
天台平面圖

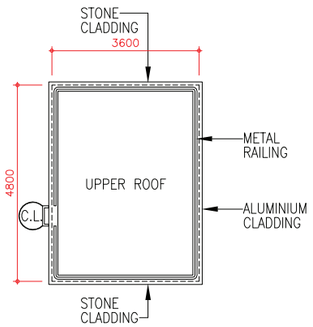

UPPER ROOF PLAN
上層天台平面圖

Note 備註:

- The dimensions of floor plans are all structural dimensions in millimetre.
  平面圖之尺規所列數字為以毫米標示之建築結構尺寸。
- Please refer to page 46 of this sales brochure for legend of the terms and abbreviations shown on the floor plans above.
  以上平面圖所顯示之名詞及簡稱請參閱本售樓說明書第46頁。

0 5M米
Scale 比例

11 FLOOR PLANS OF RESIDENTIAL PROPERTIES IN THE DEVELOPMENT
發展項目的住宅物業的樓面平面圖

LATEST FLOOR PLAN
現狀樓面平面圖

HOUSE 1
1 號洋房

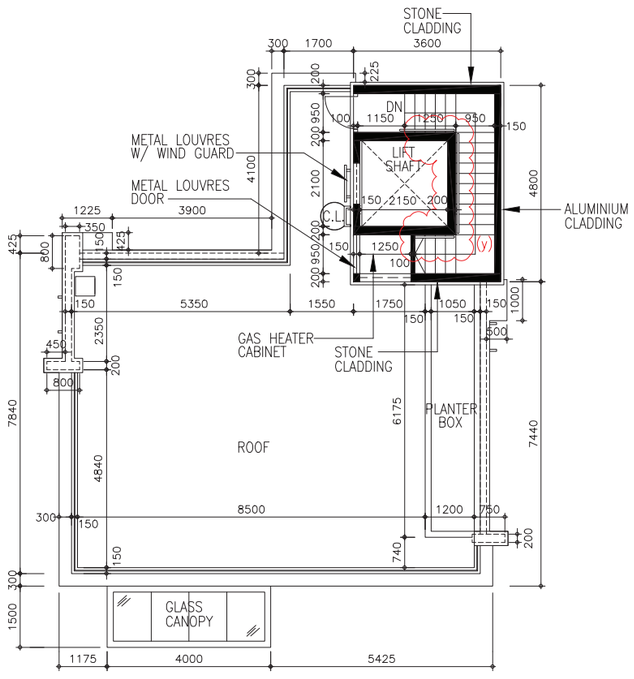

ROOF PLAN
天台平面圖

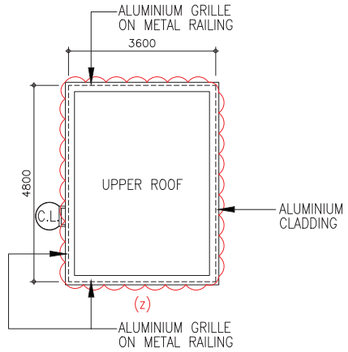

UPPER ROOF PLAN
上層天台平面圖

House 1 has been altered by way of exempted works and minor works under the Buildings Ordinance after completion of the Development. The approximate locations of the alterations are indicated on the latest floor plans and the details of the alterations are set out below (the below numberings refer to the marked alterations on the plan):
y. Alteration of handrail design.
z. Alteration of metal railing design.

1 號洋房在發展項目落成後進行獲《建築物條例》豁免及小型工程。該等改動的位置於現狀樓面平面圖中標出。該等改動列出如下(下文編號對應圖中改動編號)：
y. 更改扶手設計。
z. 更改金屬欄杆設計。

Note 備註:
- The dimensions of floor plans are all structural dimensions in millimetre.
  平面圖之尺規所列數字為以毫米標示之建築結構尺寸。
- Please refer to page 46 of this sales brochure for legend of the terms and abbreviations shown on the floor plans above.
  以上平面圖所顯示之名詞及簡稱請參閱本售樓說明書第46頁。

0 5M米
Scale 比例

11 FLOOR PLANS OF RESIDENTIAL PROPERTIES IN THE DEVELOPMENT
發展項目的住宅物業的樓面平面圖

HOUSE 2
2 號洋房

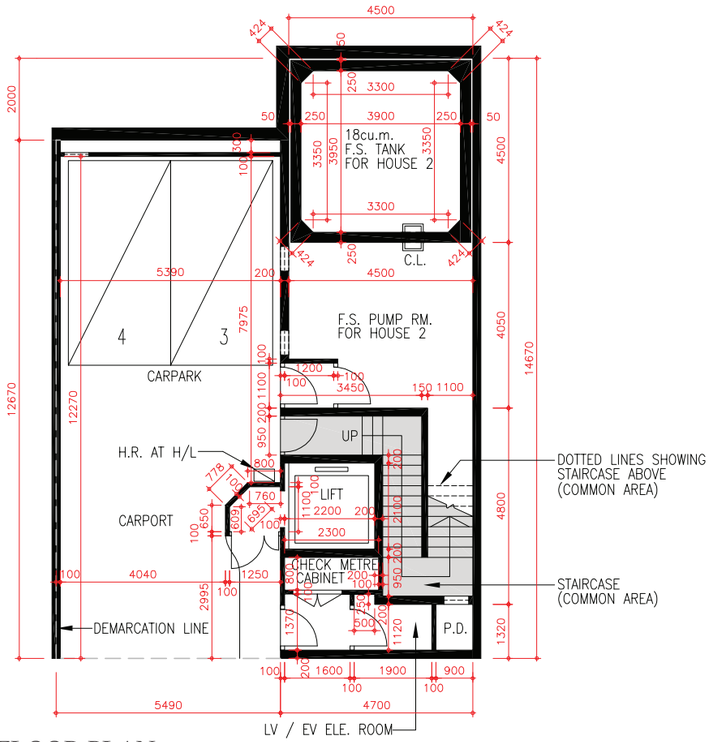

LOWER GROUND FLOOR PLAN
地下低層平面圖

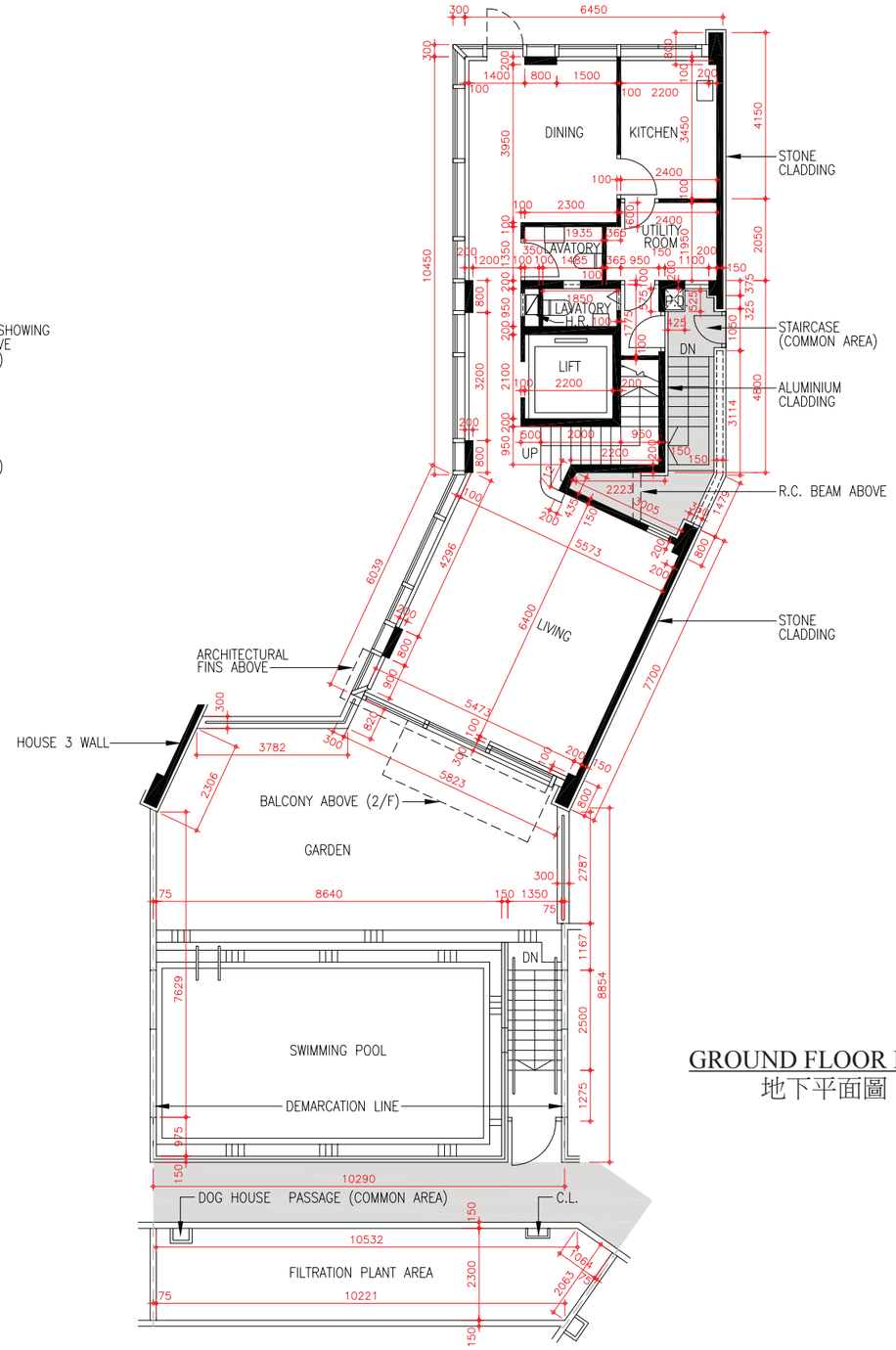

GROUND FLOOR PLAN
地下平面圖

0 5M米
Scale 比例

Floor 樓層	Thickness of Floor Slabs (Excluding Plaster) of House 2 (mm) 2 號洋房的樓板 (不包括灰泥) 的厚度(毫米)	Floor-to-Floor Height of House 2 (m) 2 號洋房 層與層之間的高度 (米)
LG/F 地下低層	250	4.0
G/F 地下	550	4.5
1/F 一樓	150	3.3
2/F 二樓	150	3.5
R/F 天台	150	3.0
UPPER R/F 上層天台	N/A 不適用	N/A 不適用

The internal areas of the residential properties on the upper floors will generally be slightly larger than those on the lower floors because of the reducing thickness of the structural walls on the upper floors.
因住宅物業的較高樓層的結構牆的厚度遞減，較高樓層的內部面積，一般比較低樓層的內部面積稍大。

Note 備註:

- The dimensions of floor plans are all structural dimensions in millimetre.
  平面圖之尺規所列數字為以毫米標示之建築結構尺寸。
- Please refer to page 46 of this sales brochure for legend of the terms and abbreviations shown on the floor plans above.
  以上平面圖所顯示之名詞及簡稱請參閱本售樓說明書第46頁。

11 FLOOR PLANS OF RESIDENTIAL PROPERTIES IN THE DEVELOPMENT
發展項目的住宅物業的樓面平面圖

LATEST FLOOR PLAN
現狀樓面平面圖

HOUSE 2
2 號洋房

House 2 has been altered by way of exempted works and minor works under the Buildings Ordinance after completion of the Development.

The approximate locations of the alterations are indicated on the latest floor plans and the details of the alterations are set out below (the below numberings refer to the marked alterations on the plan):

a. Demolition of lift lobby.
b. Alteration of handrail design, addition of new metal door and threshold.
c. Relocation of hose reel and erection of new hose reel cabinet.
d. Erection of new non-structural partition.
e. Relocation of sink.
f. Removal of louvre on wall.
g. Alteration of handrail design.
g(a). Addition of new stone floor paving in garden.
g(b). Addition of new roller shutter.

2 號洋房在發展項目落成後進行獲《建築物條例》豁免及小型工程。該等改動的位置於現狀樓面平面圖中標出。該等改動列出如下(下文編號對應圖中改動編號)：

a. 拆除電梯大堂。
b. 更改扶手設計、加建新金屬門及門檻。
c. 更改消防喉轆位置及豎立新消防喉轆櫃。
d. 豎立新非結構側板。
e. 更改洗手盆位置。
f. 移除牆上百葉。
g. 更改扶手設計。
g(a). 加建花園新石鋪地台。
g(b). 加建新捲閘。

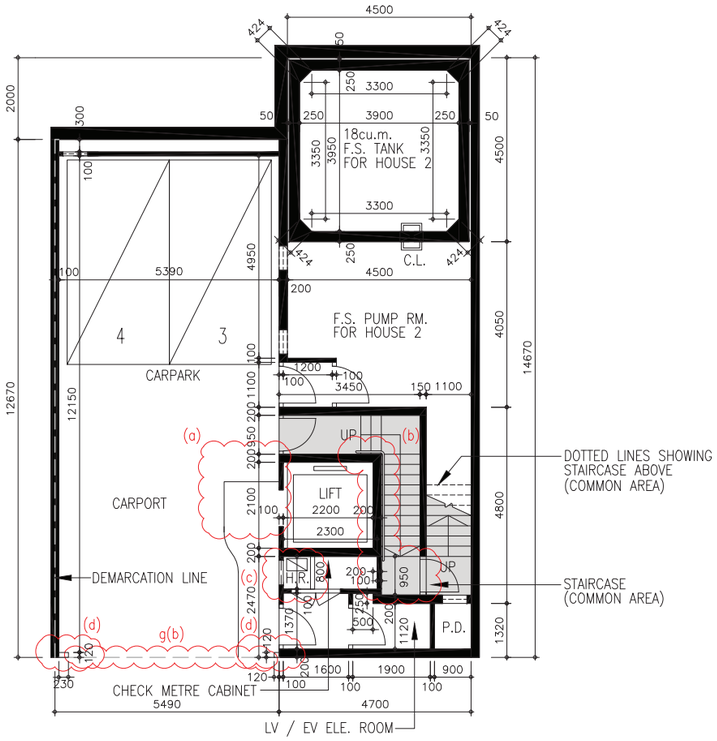

LOWER GROUND FLOOR PLAN
地下低層平面圖

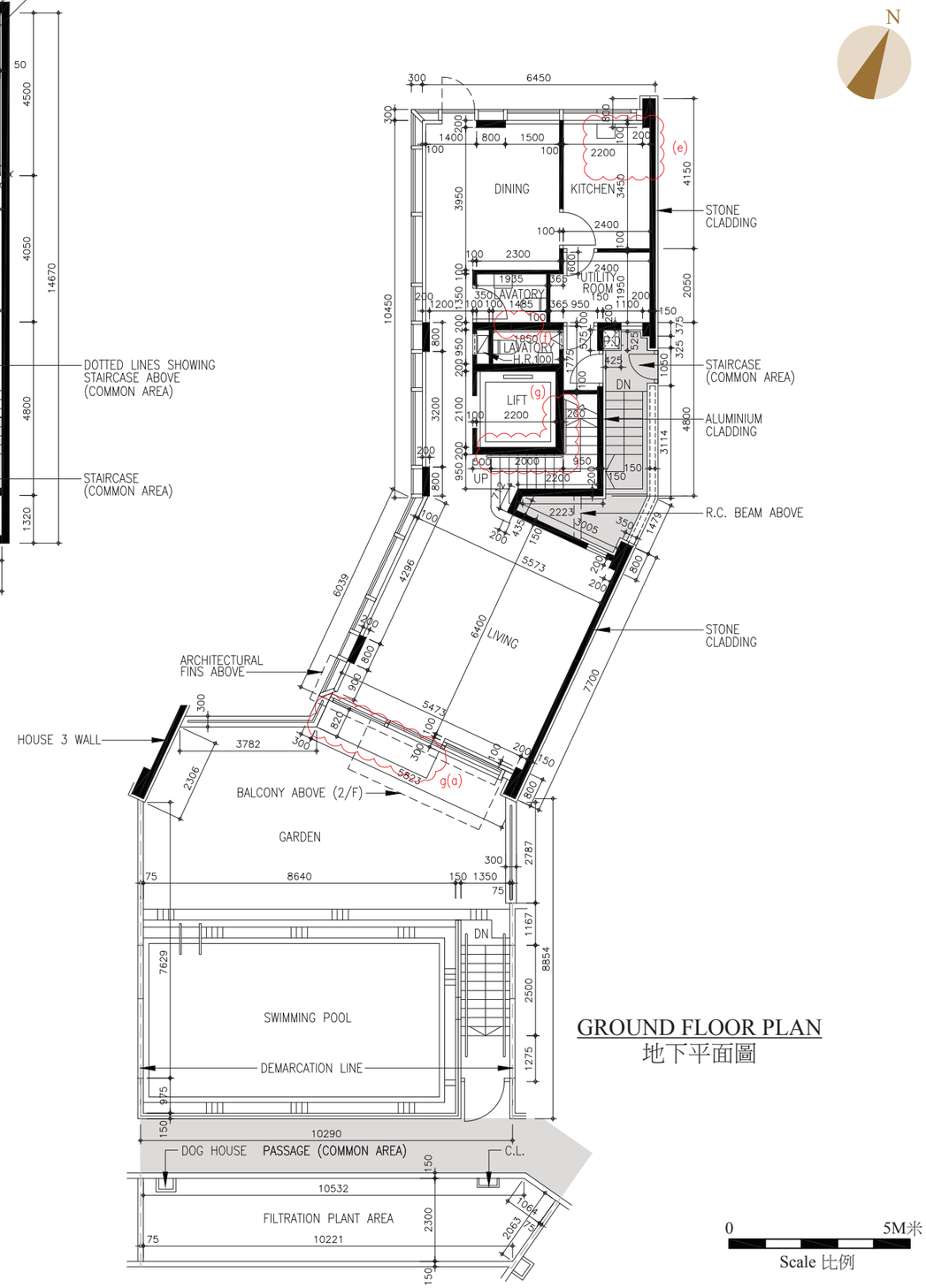

GROUND FLOOR PLAN
地下平面圖

Note 備註:

- The dimensions of floor plans are all structural dimensions in millimetre.
  平面圖之尺規所列數字為以毫米標示之建築結構尺寸。
- Please refer to page 46 of this sales brochure for legend of the terms and abbreviations shown on the floor plans above.
  以上平面圖所顯示之名詞及簡稱請參閱本售樓說明書第46頁。

11 FLOOR PLANS OF RESIDENTIAL PROPERTIES IN THE DEVELOPMENT
發展項目的住宅物業的樓面平面圖

HOUSE 2
2 號洋房

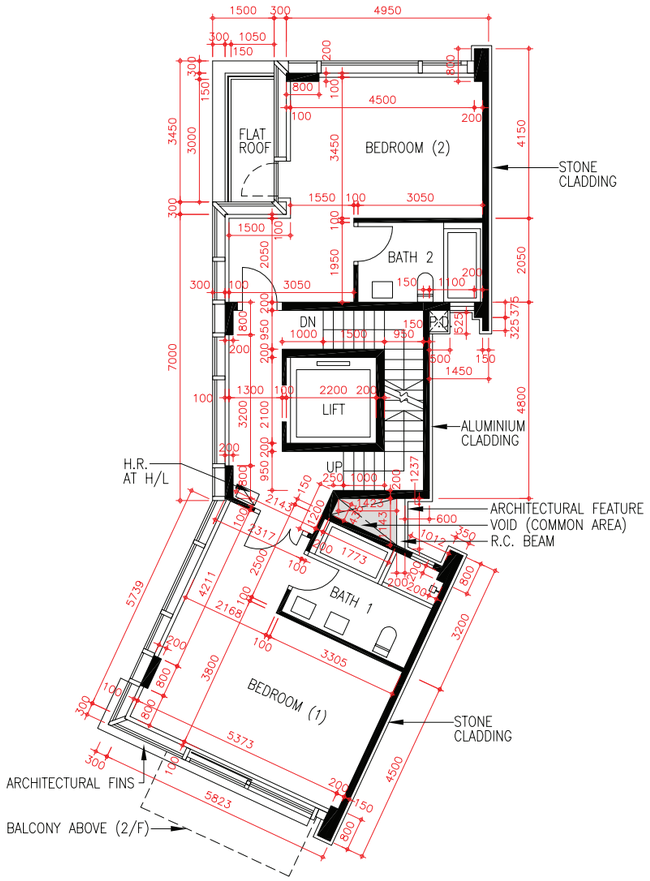

FIRST FLOOR PLAN
一樓平面圖

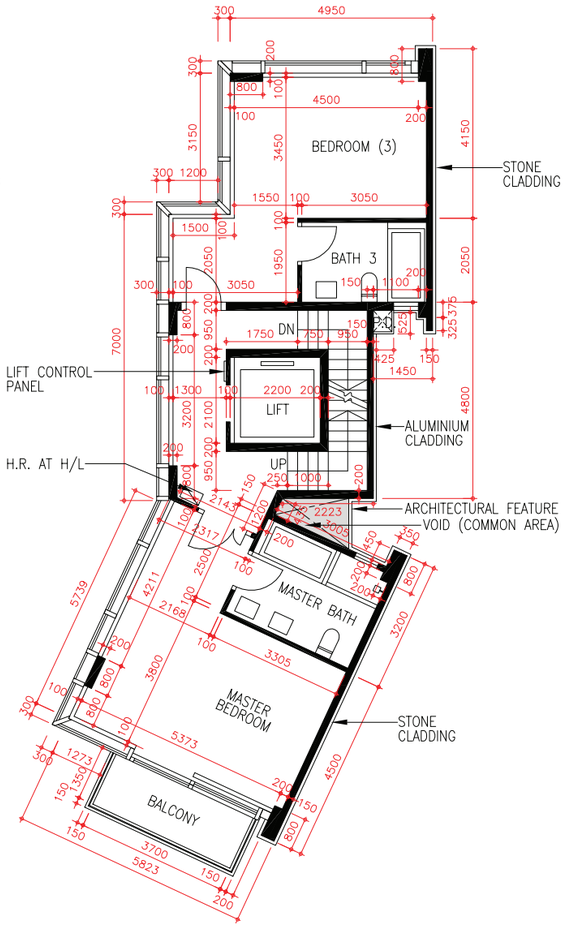

SECOND FLOOR PLAN
二樓平面圖

Note 備註:

- The dimensions of floor plans are all structural dimensions in millimetre.
  平面圖之尺規所列數字為以毫米標示之建築結構尺寸。
- Please refer to page 46 of this sales brochure for legend of the terms and abbreviations shown on the floor plans above.
  以上平面圖所顯示之名詞及簡稱請參閱本售樓說明書第46頁。

0 5M米
Scale 比例

11 FLOOR PLANS OF RESIDENTIAL PROPERTIES IN THE DEVELOPMENT
發展項目的住宅物業的樓面平面圖

LATEST FLOOR PLAN
現狀樓面平面圖

HOUSE 2
2 號洋房

House 2 has been altered by way of exempted works and minor works under the Buildings Ordinance after completion of the Development. The approximate locations of the alterations are indicated on the latest floor plans and the details of the alterations are set out below (the below numberings refer to the marked alterations on the plan):

h. Erection of new closet partition and removal of a part of concrete curb.
i. Alteration of handrail design.
j. Relocation of hose reel, removal of partition wall, erection of new closet partition and new hose reel cabinet.
k. Addition of new furring wall and relocation of shower mixer for shower cubicle.
m. Erection of new closet partition.
n. Alteration of handrail design.
o. Relocation of hose reel, removal of partition wall, erection of new closet partition and new hose reel cabinet.
p. Addition of new furring wall and relocation of shower mixer for shower cubicle.

2 號洋房在發展項目落成後進行獲《建築物條例》豁免及小型工程。該等改動的位置於現狀樓面平面圖中標出。該等改動列出如下(下文編號對應圖中改動 編號)：

h. 豎立新衣櫃側板及移除部分混凝土壆。
i. 更改扶手設計。
j. 更改消防喉轆位置、移除分隔牆、豎立新衣櫃側板及新消防喉轆櫃。
k. 加建新填充牆及更改淋浴間花灑水龍頭位置。
m. 豎立新衣櫃側板。
n. 更改扶手設計。
o. 更改消防喉轆位置、移除分隔牆、豎立新衣櫃側板及新消防喉轆櫃。
p. 加建新填充牆及更改淋浴間花灑水龍頭位置。

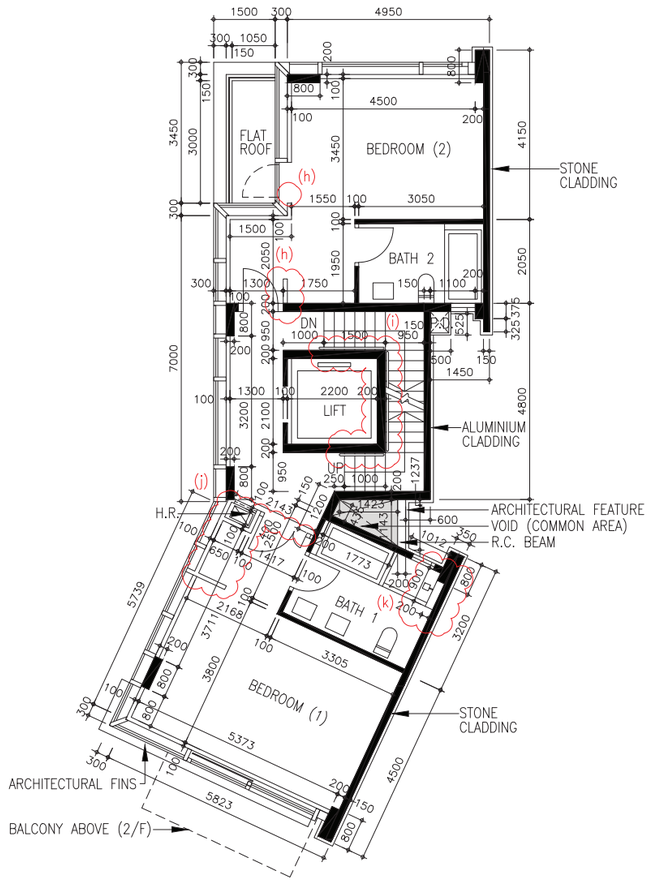

FIRST FLOOR PLAN
一樓平面圖

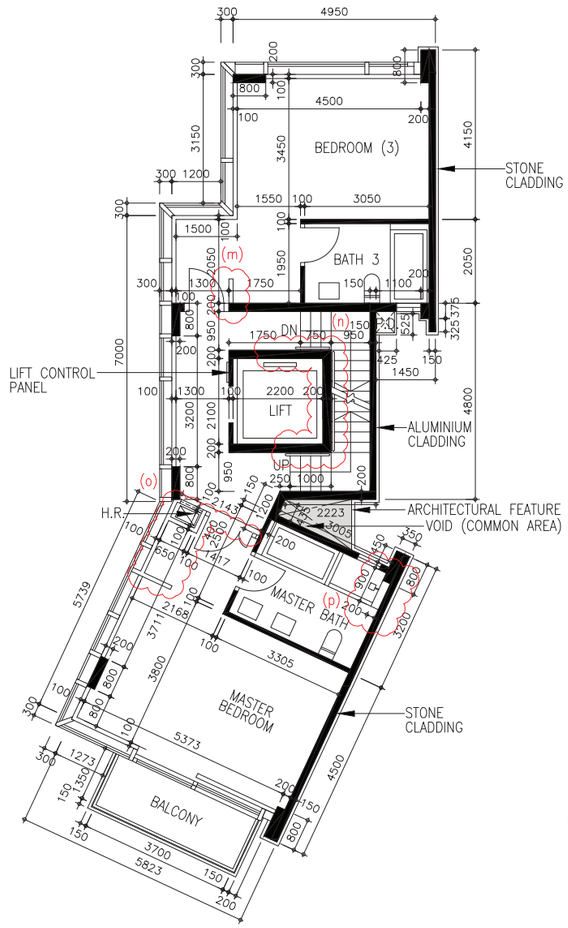

SECOND FLOOR PLAN
二樓平面圖

N

Note 備註:

- The dimensions of floor plans are all structural dimensions in millimetre.
  平面圖之尺規所列數字為以毫米標示之建築結構尺寸。
- Please refer to page 46 of this sales brochure for legend of the terms and abbreviations shown on the floor plans above.
  以上平面圖所顯示之名詞及簡稱請參閱本售樓說明書第46頁。

0 5M米
Scale 比例

11 FLOOR PLANS OF RESIDENTIAL PROPERTIES IN THE DEVELOPMENT
發展項目的住宅物業的樓面平面圖

HOUSE 2
2 號洋房

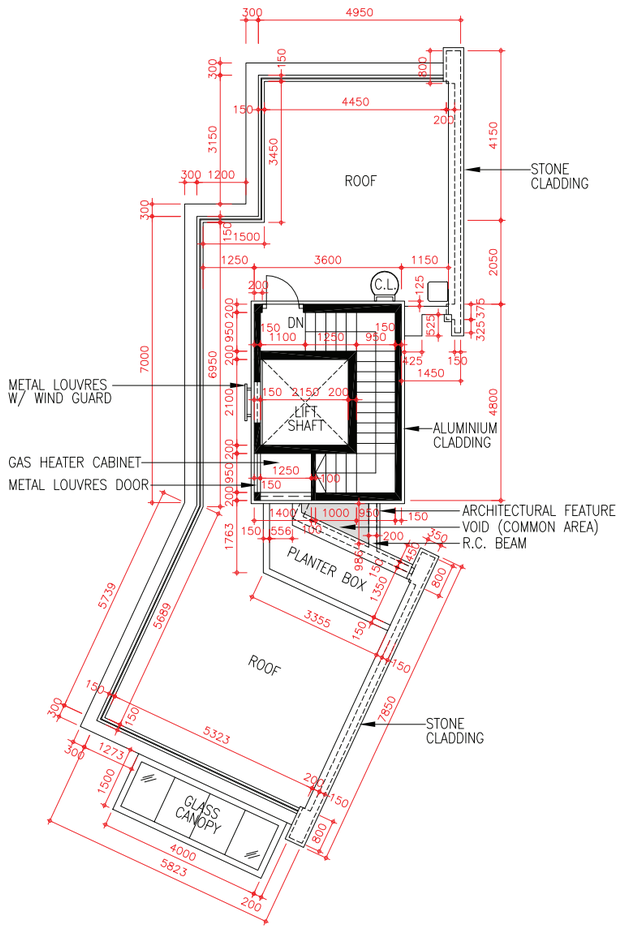

ROOF PLAN
天台平面圖

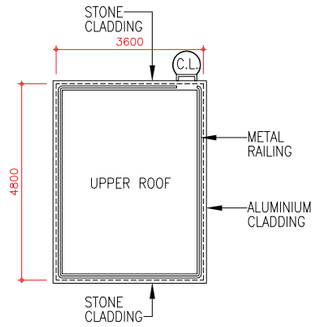

UPPER ROOF PLAN
上層天台平面圖

Note 備註:

- The dimensions of floor plans are all structural dimensions in millimetre.
  平面圖之尺規所列數字為以毫米標示之建築結構尺寸。
- Please refer to page 46 of this sales brochure for legend of the terms and abbreviations shown on the floor plans above.
  以上平面圖所顯示之名詞及簡稱請參閱本售樓說明書第46頁。

0 5M米
Scale 比例

11 FLOOR PLANS OF RESIDENTIAL PROPERTIES IN THE DEVELOPMENT
發展項目的住宅物業的樓面平面圖

LATEST FLOOR PLAN
現狀樓面平面圖

HOUSE 2
2 號洋房

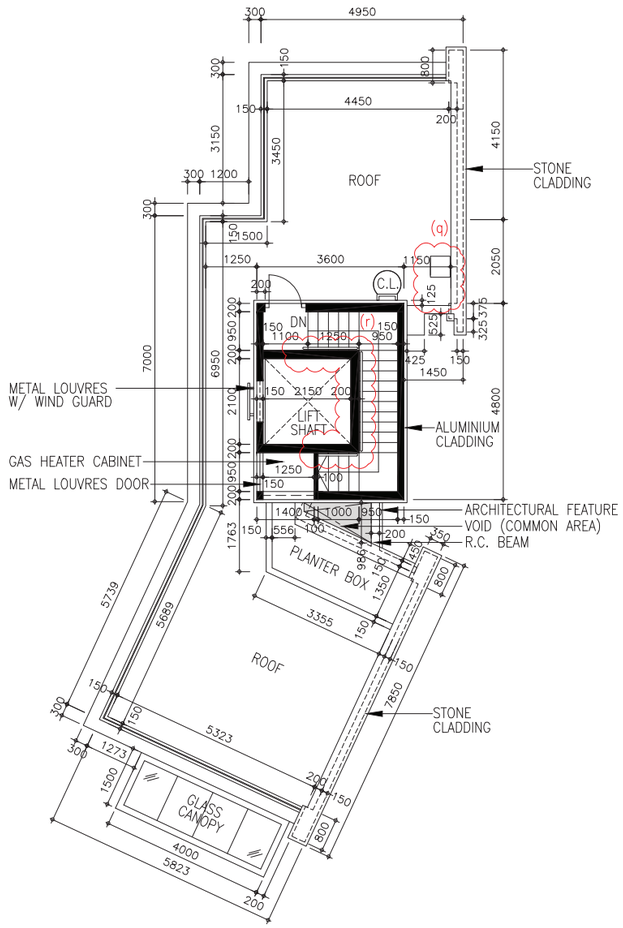

ROOF PLAN
天台平面圖

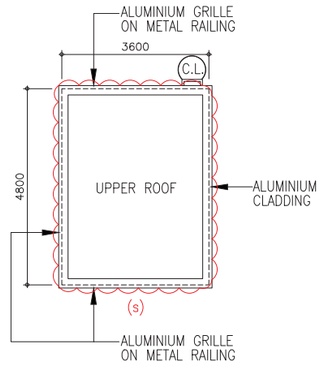

UPPER ROOF PLAN
上層天台平面圖

House 2 has been altered by way of exempted works and minor works under the Buildings Ordinance after completion of the Development. The approximate locations of the alterations are indicated on the latest floor plans and the details of the alterations are set out below (the below numberings refer to the marked alterations on the plan):

q. Relocation of sink.
r. Alteration of handrail design.
s. Alteration of metal railing design.

2 號洋房在發展項目落成後進行獲《建築物條例》豁免及小型工程。該等改動的位置於現狀樓面平面圖中標出。該等改動列出如下(下文編號對應圖中改動編號)：

q. 更改洗手盆位置。
r. 更改扶手設計。
s. 更改金屬欄杆設計。

Note 備註:

- The dimensions of floor plans are all structural dimensions in millimetre.
  平面圖之尺規所列數字為以毫米標示之建築結構尺寸。
- Please refer to page 46 of this sales brochure for legend of the terms and abbreviations shown on the floor plans above.
  以上平面圖所顯示之名詞及簡稱請參閱本售樓說明書第46頁。

0 5M米
Scale 比例

11 FLOOR PLANS OF RESIDENTIAL PROPERTIES IN THE DEVELOPMENT
發展項目的住宅物業的樓面平面圖

HOUSE 3
3 號洋房

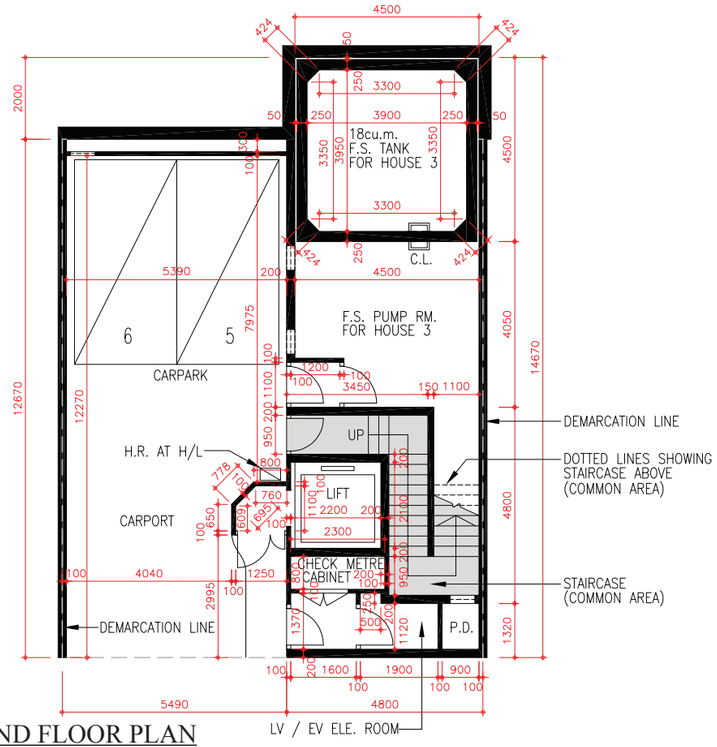

LOWER GROUND FLOOR PLAN
地下低層平面圖

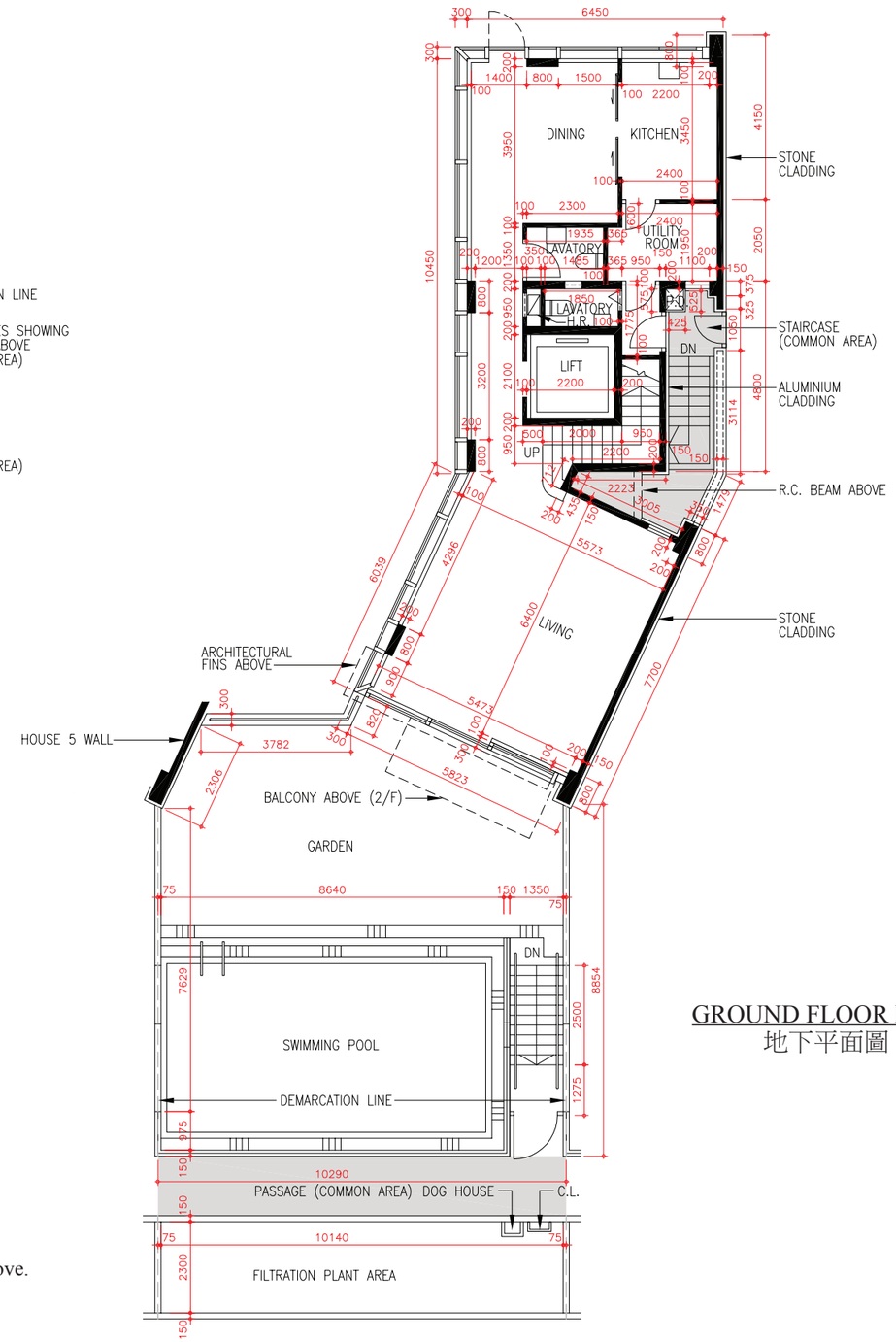

GROUND FLOOR PLAN
地下平面圖

N

0 5M米
Scale 比例

Floor 樓層	Thickness of Floor Slabs (Excluding Plaster) of House 3 (mm) 3 號洋房的樓板 (不包括灰泥) 的厚度 (毫米)	Floor-to-Floor Height of House 3 (m) 3 號洋房 層與層之間的高度 (米)
LG/F 地下低層	250	4.0
G/F 地下	550	4.5
1/F 一樓	150	3.3
2/F 二樓	150	3.5
R/F 天台	150	3.0
UPPER R/F 上層天台	N/A 不適用	N/A 不適用

The internal areas of the residential properties on the upper floors will generally be slightly larger than those on the lower floors because of the reducing thickness of the structural walls on the upper floors.
因住宅物業的較高樓層的結構牆的厚度遞減，較高樓層的內部面積，一般比較低樓層的內部面積稍大。

Note 備註:

- The dimensions of floor plans are all structural dimensions in millimetre.
  平面圖之尺規所列數字為以毫米標示之建築結構尺寸。
- Please refer to page 46 of this sales brochure for legend of the terms and abbreviations shown on the floor plans above.
  以上平面圖所顯示之名詞及簡稱請參閱本售樓說明書第46頁。

11 FLOOR PLANS OF RESIDENTIAL PROPERTIES IN THE DEVELOPMENT
發展項目的住宅物業的樓面平面圖

LATEST FLOOR PLAN
現狀樓面平面圖

HOUSE 3
3 號洋房

House 3 has been altered by way of exempted works and minor works under the Buildings Ordinance after completion of the Development. The approximate locations of the alterations are indicated on the latest floor plans and the details of the alterations are set out below (the below numberings refer to the marked alterations on the plan):

a. Demolition of lift lobby.
b. Alteration of handrail design, addition of new metal door and threshold.
c. Relocation of hose reel and erection of new hose reel cabinet.
d. Erection of new non-structural partition.
e. Relocation of wash basin, water closet and removal of louvre on wall.
f. Relocation of aluminium folding door leaf.
g. Alteration of handrail design.
g(a). Addition of new stone floor paving in garden.
g(b). Removal of concrete curb.
g(c). Addition of new roller shutter.

3 號洋房在發展項目落成後進行獲《建築物條例》豁免及小型工程。該等改動的位置於現狀樓面平面圖中標出。該等改動列出如下(下文編號對應圖中改動編號)：

a. 拆除電梯大堂。
b. 更改扶手設計、加建新金屬門及門檻。
c. 更改消防喉轆位置及豎立新消防喉轆櫃。
d. 豎立新非結構側板。
e. 更改洗手盆、坐廁位置及移除牆上百葉。
f. 更改鋁摺門頁位置。
g. 更改扶手設計。
g(a). 加建花園新石鋪地台。
g(b). 移除混凝土壁。
g(c). 加建新捲閘。

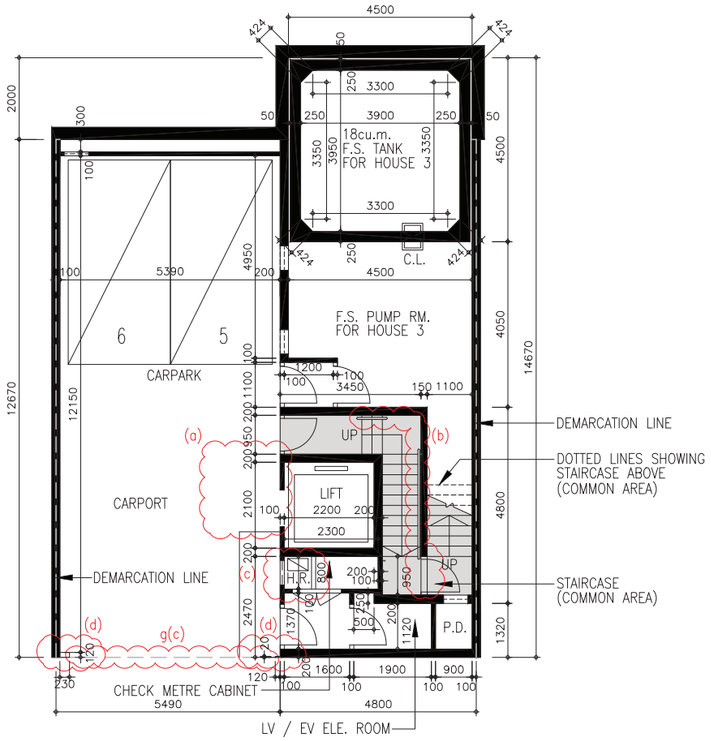

LOWER GROUND FLOOR PLAN
地下低層平面圖

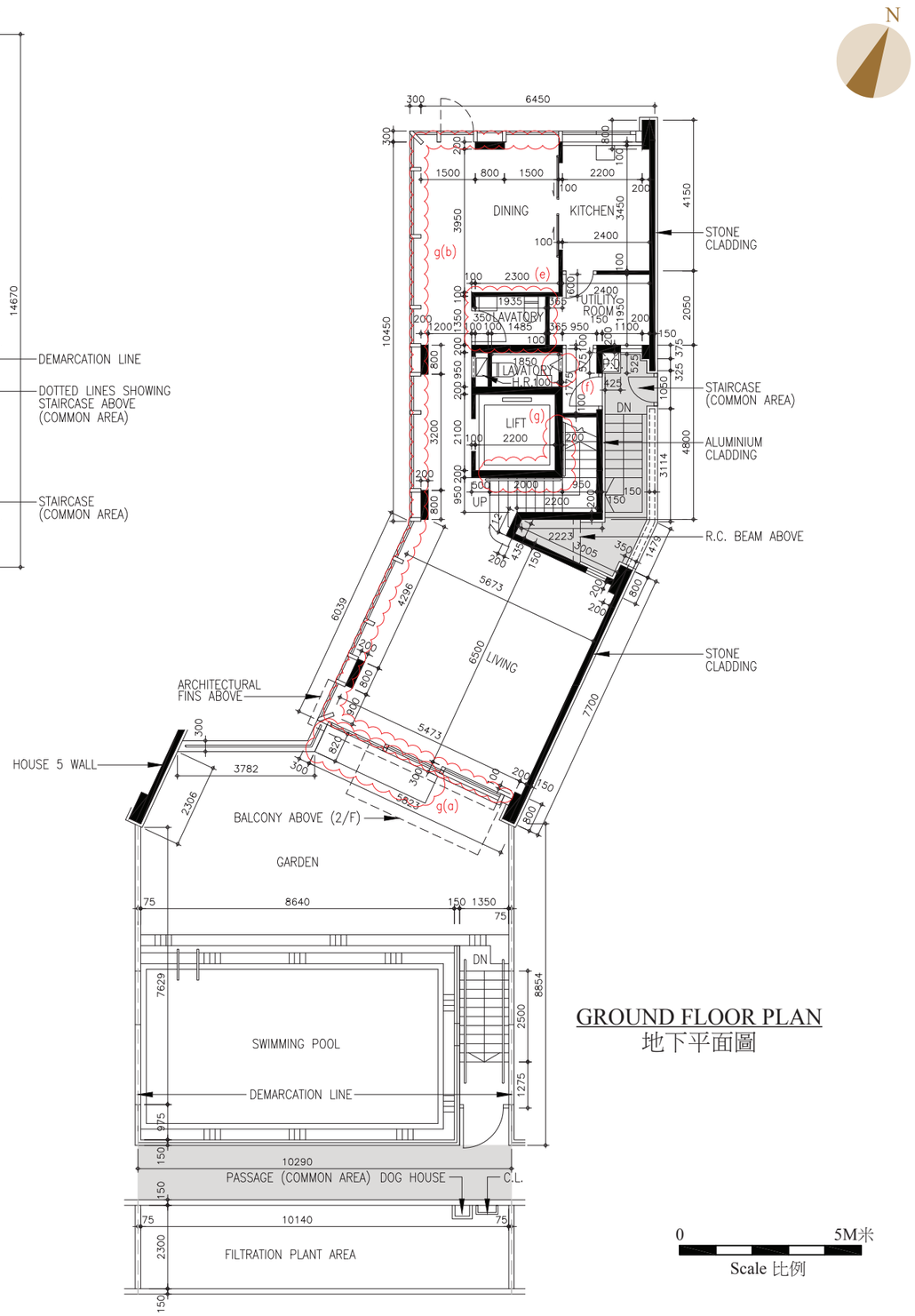

GROUND FLOOR PLAN
地下平面圖

Note 備註:

- The dimensions of floor plans are all structural dimensions in millimetre.
  平面圖之尺規所列數字為以毫米標示之建築結構尺寸。
- Please refer to page 46 of this sales brochure for legend of the terms and abbreviations shown on the floor plans above.
  以上平面圖所顯示之名詞及簡稱請參閱本售樓說明書第46頁。

11 FLOOR PLANS OF RESIDENTIAL PROPERTIES IN THE DEVELOPMENT
發展項目的住宅物業的樓面平面圖

HOUSE 3
3 號洋房

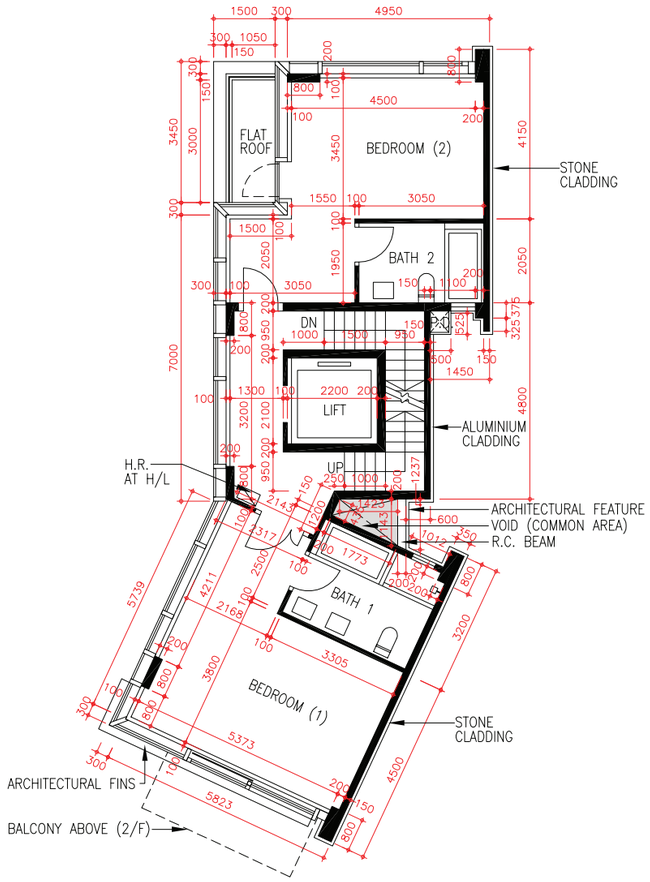

FIRST FLOOR PLAN
一樓平面圖

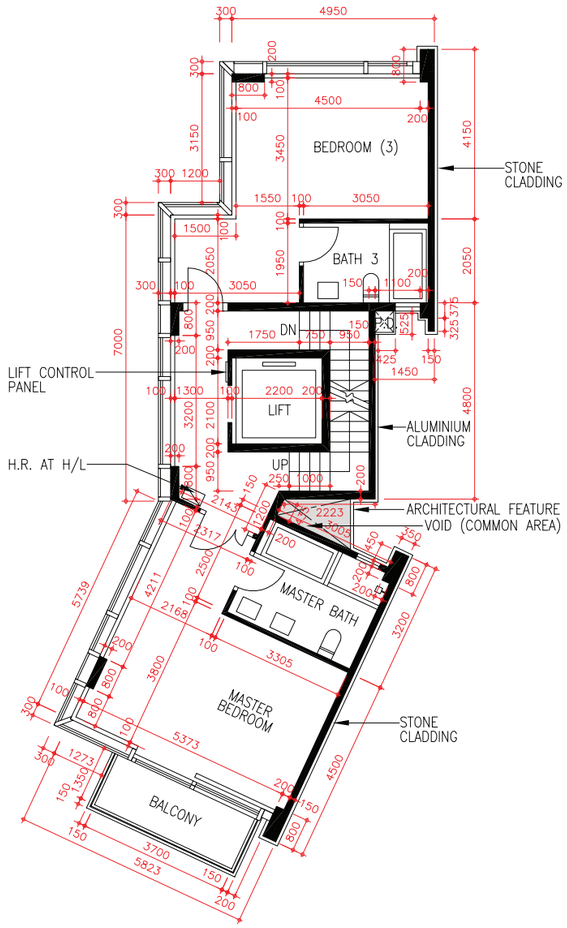

SECOND FLOOR PLAN
二樓平面圖

Note 備註:

- The dimensions of floor plans are all structural dimensions in millimetre.
  平面圖之尺規所列數字為以毫米標示之建築結構尺寸。
- Please refer to page 46 of this sales brochure for legend of the terms and abbreviations shown on the floor plans above.
  以上平面圖所顯示之名詞及簡稱請參閱本售樓說明書第46頁。

0 5M米
Scale 比例

LATEST FLOOR PLAN
現狀樓面平面圖

HOUSE 3
3 號洋房

House 3 has been altered by way of exempted works and minor works under the Buildings Ordinance after completion of the Development. The approximate locations of the alterations are indicated on the latest floor plans and the details of the alterations are set out below (the below numberings refer to the marked alterations on the plan):

h. Alteration of bathtub design and relocation of shower mixer for bathtub.
i. Alteration of handrail design.
j. Relocation of hose reel, removal of partition wall, erection of new hose reel cabinet, alteration of one & half door to single door and removal of concrete curb.
k. Addition of new furring wall and relocation of shower mixer for bathtub and shower cubicle.
m. Removal of one wash basin.
n. Alteration of bathtub design and relocation of shower mixer for bathtub.
o. Alteration of handrail design.
p. Relocation of hose reel, removal of partition wall, erection of new hose reel cabinet and removal of concrete curb.
q. Addition of new furring wall and relocation of shower mixer for bathtub and shower cubicle.

3 號洋房在發展項目落成後進行獲《建築物條例》豁免及小型工程。該等改動的位置於現狀樓面平面圖中標出。該等改動列出如下(下文編號對應圖中改動編號)：

h. 更改浴缸設計及更改浴缸花灑水龍頭位置。
i. 更改扶手設計。
j. 更改消防喉轆位置、移除分隔牆、豎立新消防喉轆櫃及改動子母門至單掩門及移除混凝土壆。
k. 加建新填充牆及更改浴缸及淋浴間花灑水龍頭位置。
m. 移除一個洗手盆。
n. 更改浴缸設計及更改浴缸花灑水龍頭位置。
o. 更改扶手設計。
p. 更改消防喉轆位置、移除分隔牆、豎立新消防喉轆櫃及移除混凝土壆。
q. 加建新填充牆、更改浴缸及淋浴間花灑水龍頭位置。

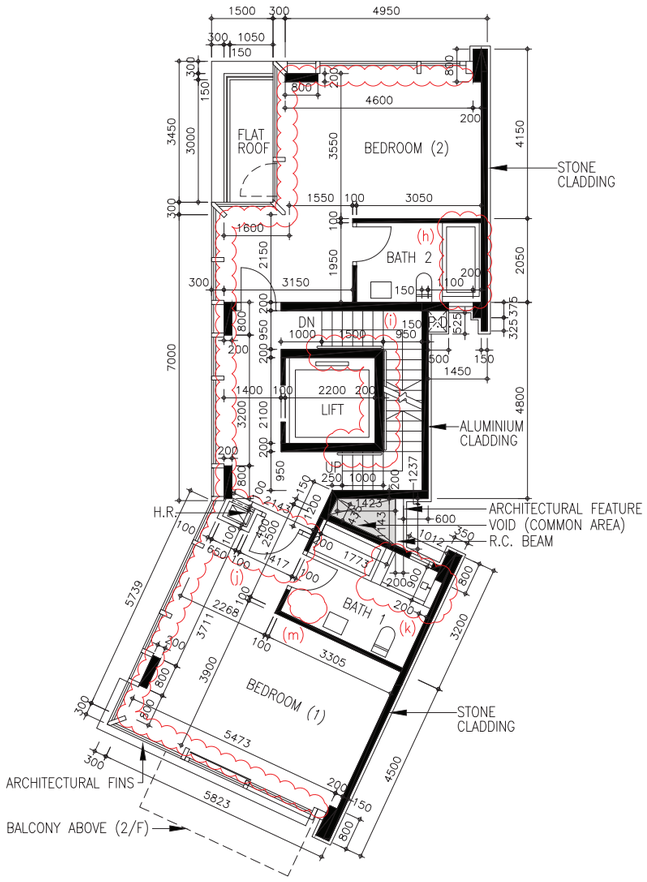

FIRST FLOOR PLAN
一樓平面圖

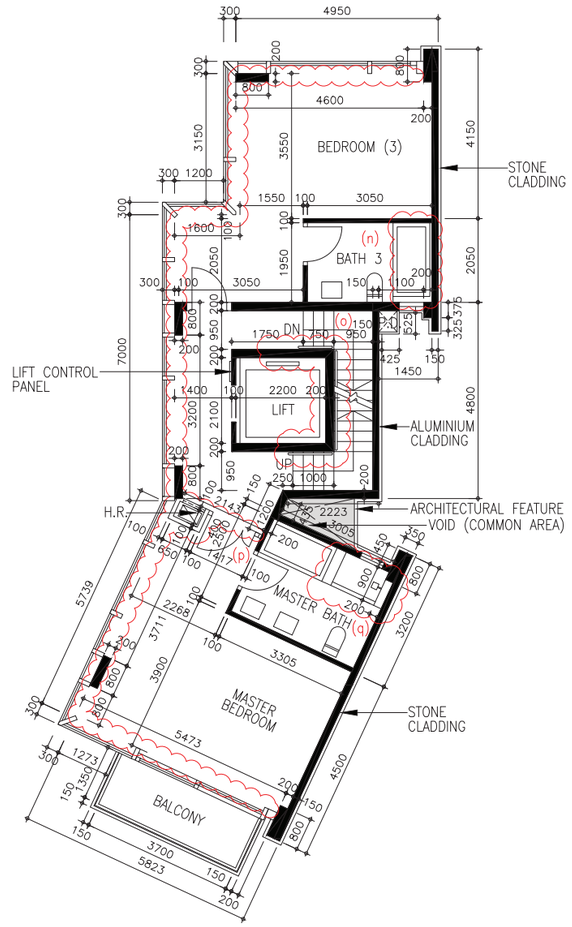

SECOND FLOOR PLAN
二樓平面圖

Note 備註:

- The dimensions of floor plans are all structural dimensions in millimetre.
  平面圖之尺規所列數字為以毫米標示之建築結構尺寸。
- Please refer to page 46 of this sales brochure for legend of the terms and abbreviations shown on the floor plans above.
  以上平面圖所顯示之名詞及簡稱請參閱本售樓說明書第46頁。

0 5M米
Scale 比例

11 FLOOR PLANS OF RESIDENTIAL PROPERTIES IN THE DEVELOPMENT
發展項目的住宅物業的樓面平面圖

HOUSE 3
3 號洋房

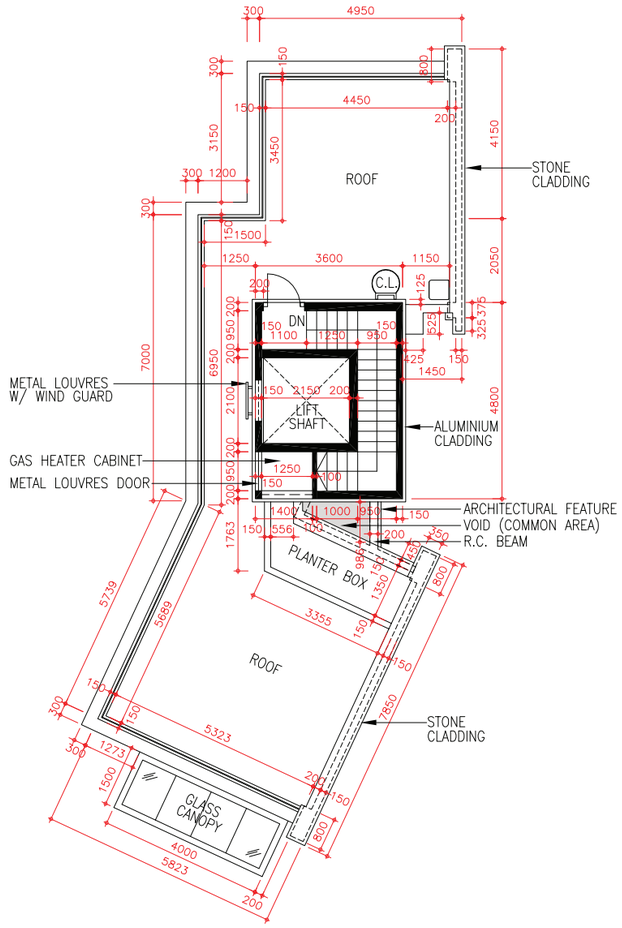

ROOF PLAN
天台平面圖

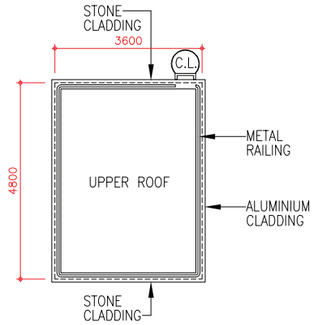

UPPER ROOF PLAN
上層天台平面圖

Note 備註:

- The dimensions of floor plans are all structural dimensions in millimetre.
  平面圖之尺規所列數字為以毫米標示之建築結構尺寸。
- Please refer to page 46 of this sales brochure for legend of the terms and abbreviations shown on the floor plans above.
  以上平面圖所顯示之名詞及簡稱請參閱本售樓說明書第46頁。

0 5M米
Scale 比例

11 FLOOR PLANS OF RESIDENTIAL PROPERTIES IN THE DEVELOPMENT
發展項目的住宅物業的樓面平面圖

LATEST FLOOR PLAN
現狀樓面平面圖

HOUSE 3
3 號洋房

House 3 has been altered by way of exempted works and minor works under the Buildings Ordinance after completion of the Development. The approximate locations of the alterations are indicated on the latest floor plans and the details of the alterations are set out below (the below numberings refer to the marked alterations on the plan):

r. Relocation of sink.
s. Alteration of handrail design.
t. Alteration of metal railing design.

3 號洋房在發展項目落成後進行獲《建築物條例》豁免及小型工程。該等改動的位置於現狀樓面平面圖中標出。該等改動列出如下(下文編號對應圖中改動編號)：

r. 更改洗手盆位置。
s. 更改扶手設計。
t. 更改金屬欄杆設計。

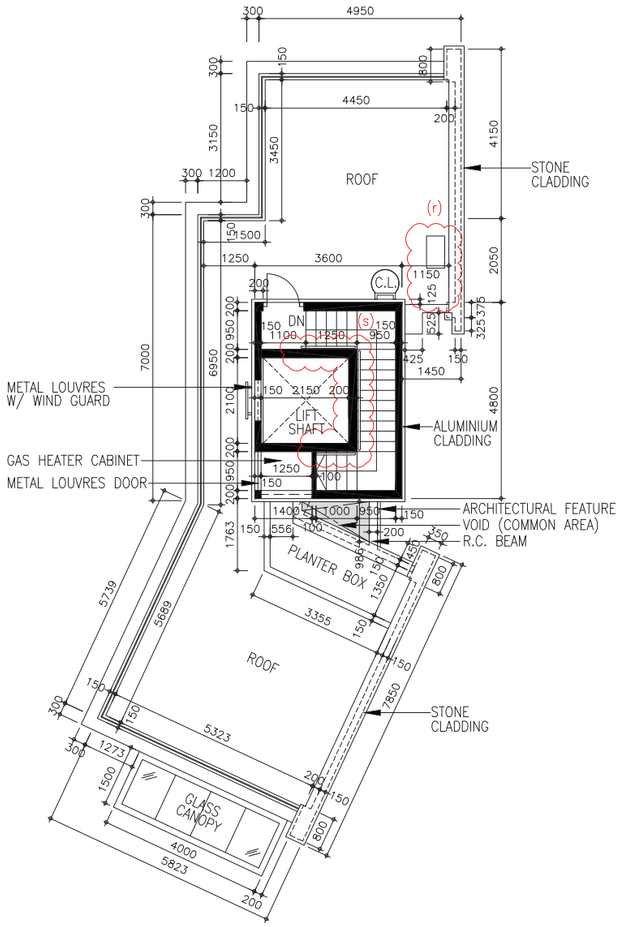

ROOF PLAN
天台平面圖

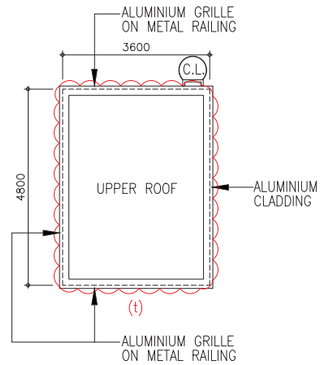

UPPER ROOF PLAN
上層天台平面圖

Note 備註:

- The dimensions of floor plans are all structural dimensions in millimetre.
  平面圖之尺規所列數字為以毫米標示之建築結構尺寸。
- Please refer to page 46 of this sales brochure for legend of the terms and abbreviations shown on the floor plans above.
  以上平面圖所顯示之名詞及簡稱請參閱本售樓說明書第46頁。

0 5M米
Scale 比例

11 FLOOR PLANS OF RESIDENTIAL PROPERTIES IN THE DEVELOPMENT
發展項目的住宅物業的樓面平面圖

HOUSE 5
5 號洋房

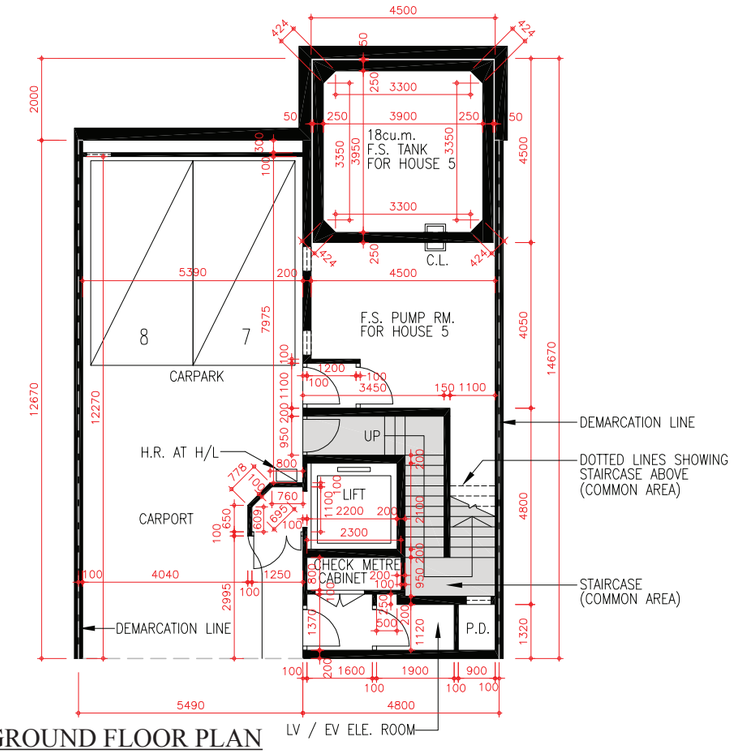

LOWER GROUND FLOOR PLAN
地下低層平面圖

Floor 樓層	Thickness of Floor Slabs (Excluding Plaster) of House 5 (mm) 5 號洋房的樓板 (不包括灰泥) 的厚度 (毫米)	Floor-to-Floor Height of House 5 (m) 5 號洋房 層與層之間的高度 (米)
LG/F 地下低層	250	4.0
G/F 地下	550	4.5
1/F 一樓	150	3.3
2/F 二樓	150	3.5
R/F 天台	150	3.0
UPPER R/F 上層天台	N/A 不適用	N/A 不適用

The internal areas of the residential properties on the upper floors will generally be slightly larger than those on the lower floors because of the reducing thickness of the structural walls on the upper floors.
因住宅物業的較高樓層的結構牆的厚度遞減，較高樓層的內部面積，一般比較低樓層的內部面積稍大。

Note 備註:
- The dimensions of floor plans are all structural dimensions in millimetre.
  平面圖之尺規所列數字為以毫米標示之建築結構尺寸。
- Please refer to page 46 of this sales brochure for legend of the terms and abbreviations shown on the floor plans above.
  以上平面圖所顯示之名詞及簡稱請參閱本售樓說明書第46頁。

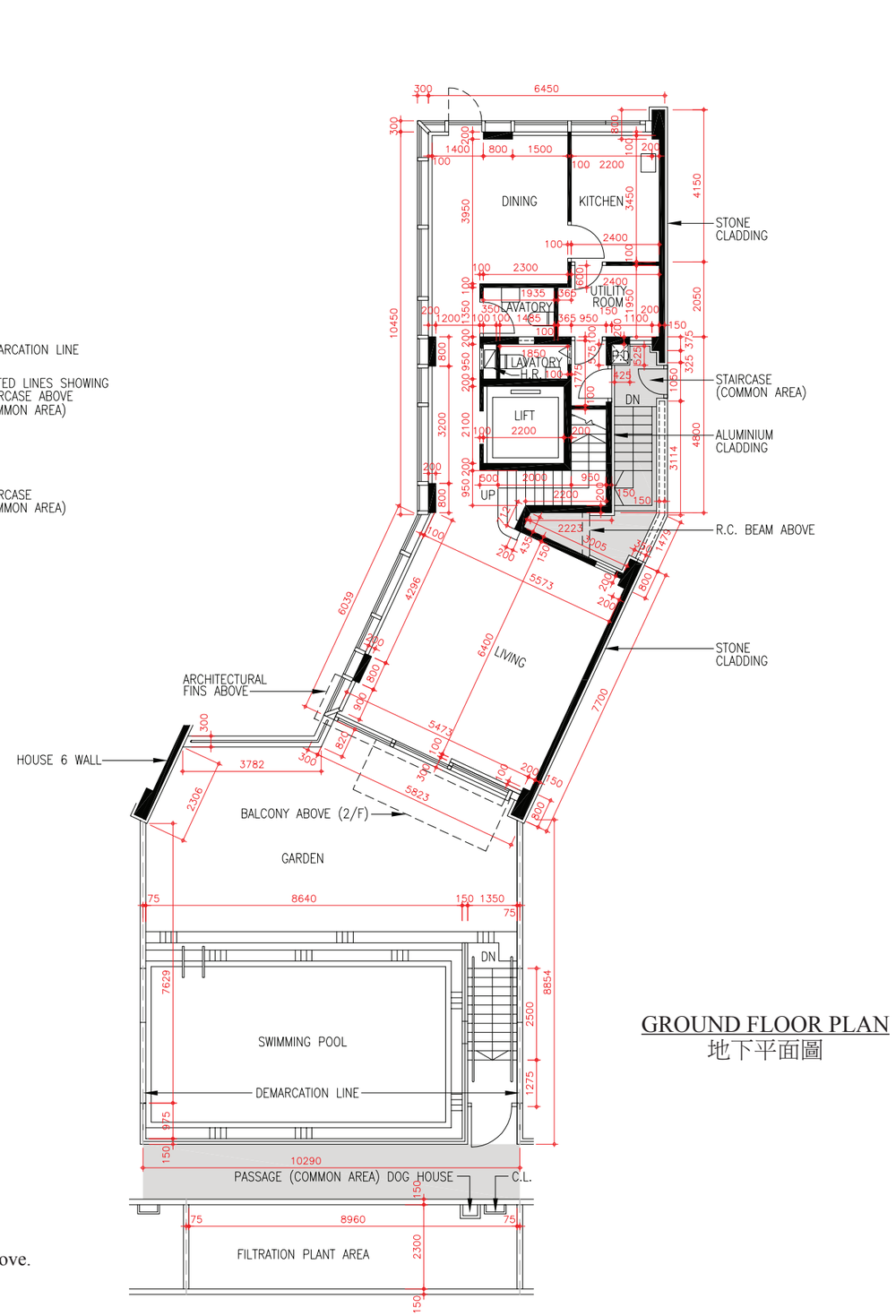

GROUND FLOOR PLAN
地下平面圖

0 5M米
Scale 比例

11 FLOOR PLANS OF RESIDENTIAL PROPERTIES IN THE DEVELOPMENT
發展項目的住宅物業的樓面平面圖

LATEST FLOOR PLAN
現狀樓面平面圖

HOUSE 5
5 號洋房

House 5 has been altered by way of exempted works and minor works under the Buildings Ordinance after completion of the Development. The approximate locations of the alterations are indicated on the latest floor plans and the details of the alterations are set out below (the below numberings refer to the marked alterations on the plan):

a. Demolition of lift lobby.
b. Alteration of handrail design, addition of new metal door and threshold.
c. Relocation of hose reel and erection of new hose reel cabinet.
d. Erection of new non-structural partition.
e. Relocation of sink.
f. Removal of louvre on wall.
g. Alteration of handrail design.
g(a). Addition of new stone floor paving in garden.
g(b). Addition of new roller shutter.

5 號洋房在發展項目落成後進行獲《建築物條例》豁免及小型工程。該等改動的位置於現狀樓面平面圖中標出。該等改動列出如下(下文編號對應圖中改動編號)：

a. 拆除電梯大堂。
b. 更改扶手設計、加建新金屬門及門檻。
c. 更改消防喉轆位置及豎立新消防喉轆櫃。
d. 豎立新非結構側板。
e. 更改洗手盆位置。
f. 移除牆上百葉。
g. 更改扶手設計。
g(a). 加建花園新石鋪地台。
g(b). 加建新捲閘。

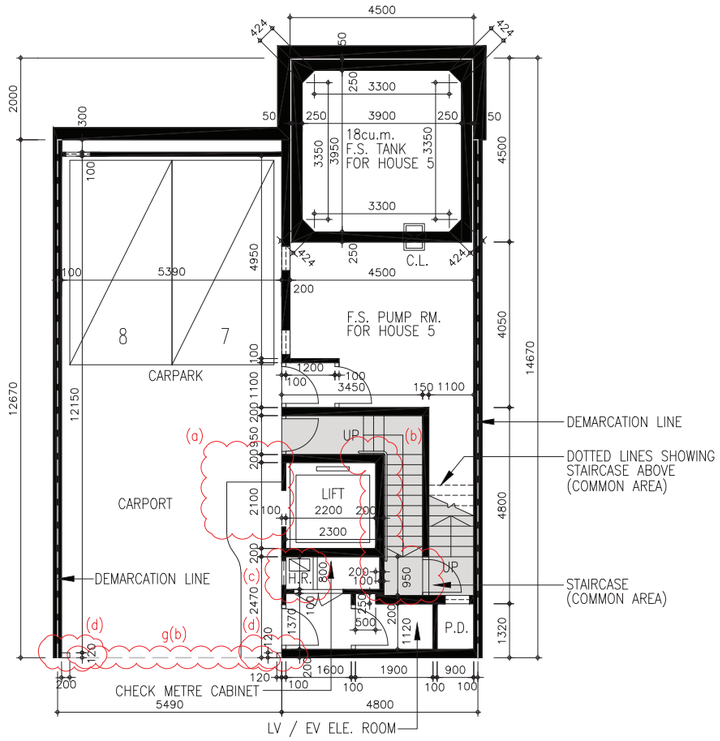

LOWER GROUND FLOOR PLAN
地下低層平面圖

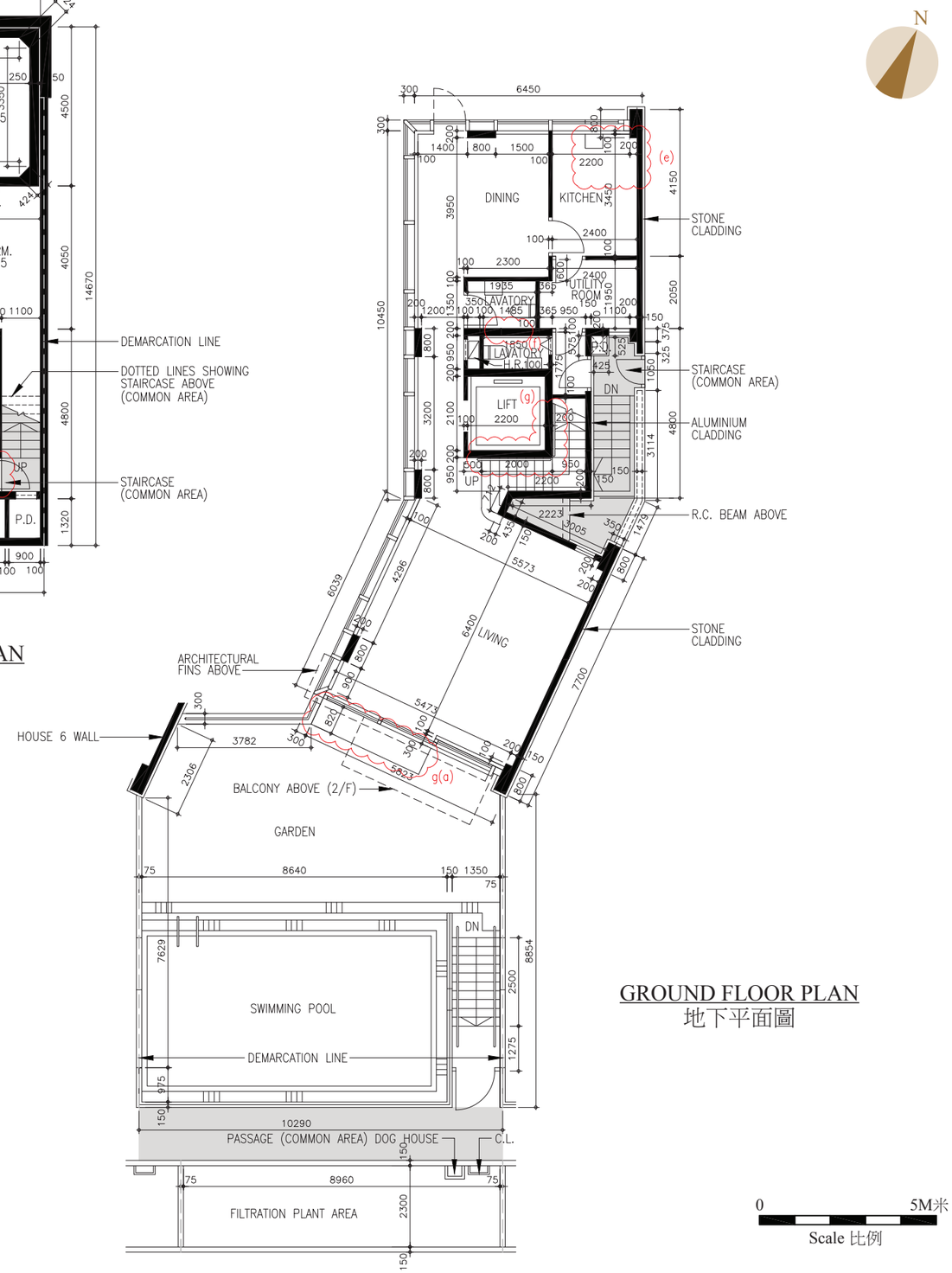

GROUND FLOOR PLAN
地下平面圖

Note 備註:

- The dimensions of floor plans are all structural dimensions in millimetre.
  平面圖之尺規所列數字為以毫米標示之建築結構尺寸。
- Please refer to page 46 of this sales brochure for legend of the terms and abbreviations shown on the floor plans above.
  以上平面圖所顯示之名詞及簡稱請參閱本售樓說明書第46頁。

11 FLOOR PLANS OF RESIDENTIAL PROPERTIES IN THE DEVELOPMENT
發展項目的住宅物業的樓面平面圖

HOUSE 5
5 號洋房

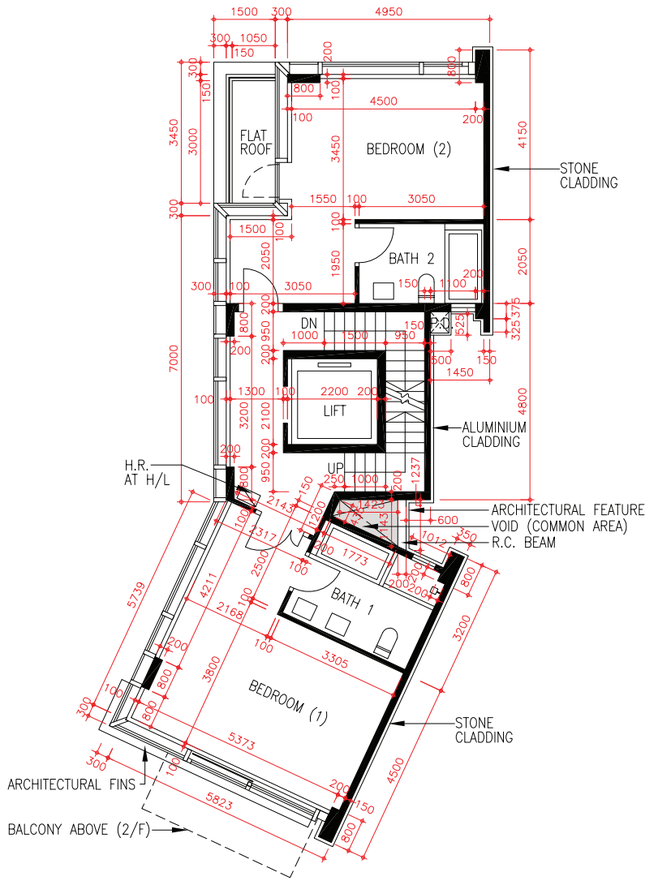

FIRST FLOOR PLAN
一樓平面圖

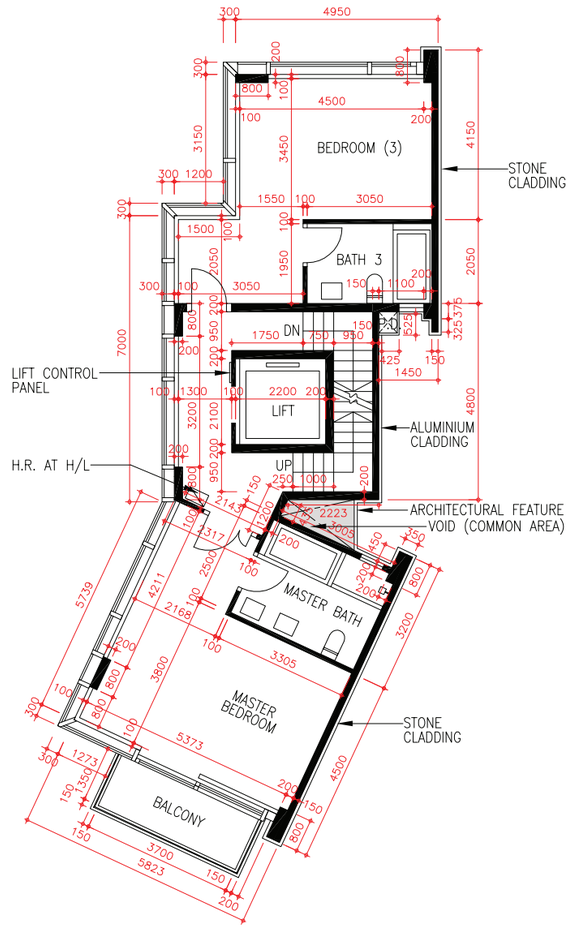

SECOND FLOOR PLAN
二樓平面圖

Note 備註:

- The dimensions of floor plans are all structural dimensions in millimetre.
  平面圖之尺規所列數字為以毫米標示之建築結構尺寸。
- Please refer to page 46 of this sales brochure for legend of the terms and abbreviations shown on the floor plans above.
  以上平面圖所顯示之名詞及簡稱請參閱本售樓說明書第46頁。

0 5M米
Scale 比例

11 FLOOR PLANS OF RESIDENTIAL PROPERTIES IN THE DEVELOPMENT
發展項目的住宅物業的樓面平面圖

LATEST FLOOR PLAN
現狀樓面平面圖

HOUSE 5
5 號洋房

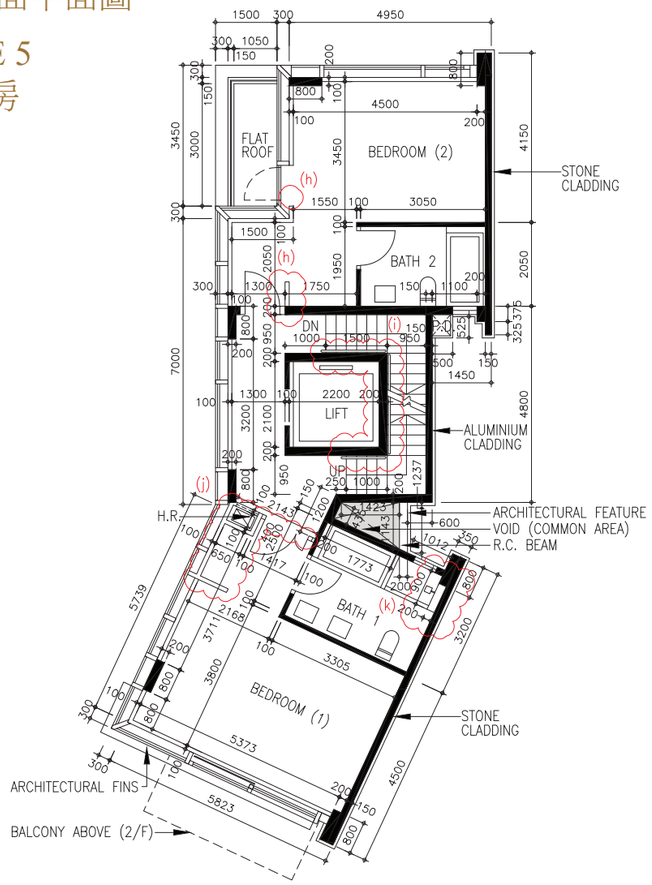

FIRST FLOOR PLAN
一樓平面圖

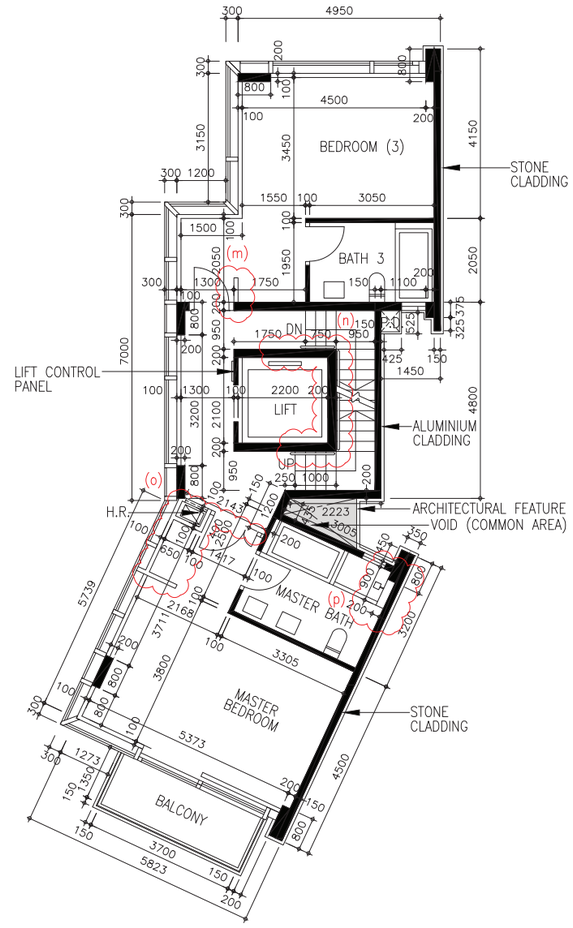

SECOND FLOOR PLAN
二樓平面圖

House 5 has been altered by way of exempted works and minor works under the Buildings Ordinance after completion of the Development. The approximate locations of the alterations are indicated on the latest floor plans and the details of the alterations are set out below (the below numberings refer to the marked alterations on the plan):

h. Erection of new closet partition and removal of a part of concrete curb.
i. Alteration of handrail design.
j. Relocation of hose reel, removal of partition wall, erection of new closet partition and new hose reel cabinet.
k. Addition of new furring wall and relocation of shower mixer for shower cubicle.
m. Erection of new closet partition.
n. Alteration of handrail design.
o. Relocation of hose reel, removal of partition wall, erection of new closet partition and new hose reel cabinet.
p. Addition of new furring wall and relocation of shower mixer for shower cubicle.

5 號洋房在發展項目落成後進行獲《建築物條例》豁免及小型工程。該等改動的位置於現狀樓面平面圖中標出。該等改動列出如下(下文編號對應圖中改動編號)：

h. 豎立新衣櫃側板及移除部分混凝土壁。
i. 更改扶手設計。
j. 更改消防喉轆位置、移除分隔牆、豎立新衣櫃側板及新消防喉轆櫃。
k. 加建新填充牆及更改淋浴間花灑水龍頭位置。
m. 豎立新衣櫃側板。
n. 更改扶手設計。
o. 更改消防喉轆位置、移除分隔牆、豎立新衣櫃側板及新消防喉轆櫃。
p. 加建新填充牆及更改淋浴間花灑水龍頭位置。

Note 備註:

- The dimensions of floor plans are all structural dimensions in millimetre.
  平面圖之尺規所列數字為以毫米標示之建築結構尺寸。
- Please refer to page 46 of this sales brochure for legend of the terms and abbreviations shown on the floor plans above.
  以上平面圖所顯示之名詞及簡稱請參閱本售樓說明書第46頁。

0 5M米
Scale 比例

11 FLOOR PLANS OF RESIDENTIAL PROPERTIES IN THE DEVELOPMENT
發展項目的住宅物業的樓面平面圖

HOUSE 5
5 號洋房

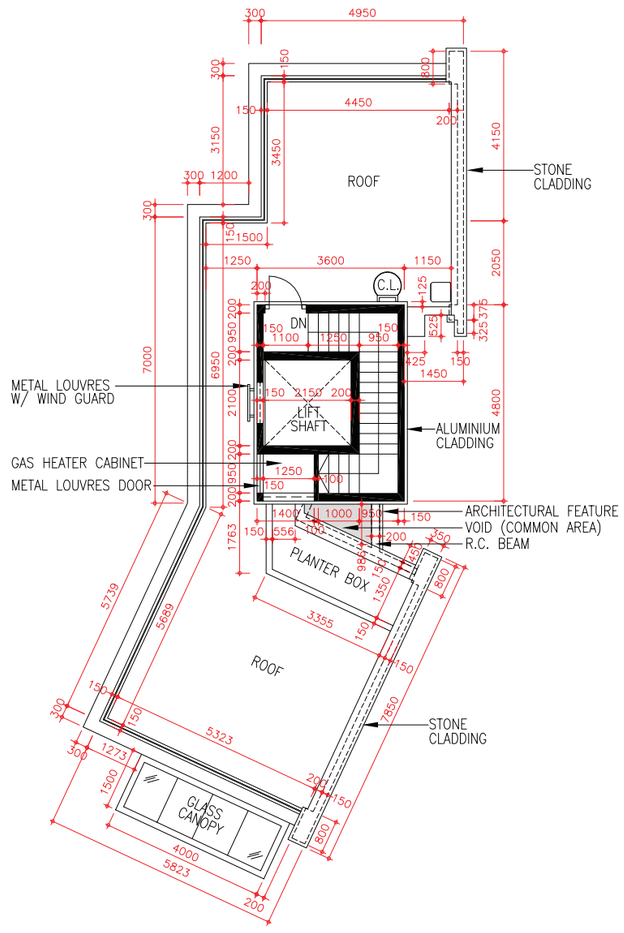

ROOF PLAN
天台平面圖

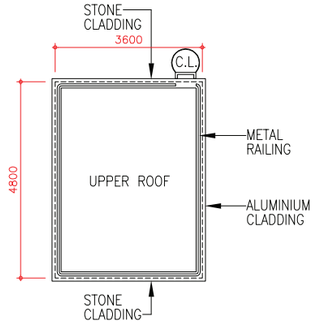

UPPER ROOF PLAN
上層天台平面圖

Note 備註:

- The dimensions of floor plans are all structural dimensions in millimetre.
  平面圖之尺規所列數字為以毫米標示之建築結構尺寸。
- Please refer to page 46 of this sales brochure for legend of the terms and abbreviations shown on the floor plans above.
  以上平面圖所顯示之名詞及簡稱請參閱本售樓說明書第46頁。

0 5M米
Scale 比例

11 FLOOR PLANS OF RESIDENTIAL PROPERTIES IN THE DEVELOPMENT
發展項目的住宅物業的樓面平面圖

LATEST FLOOR PLAN
現狀樓面平面圖

HOUSE 5
5 號洋房

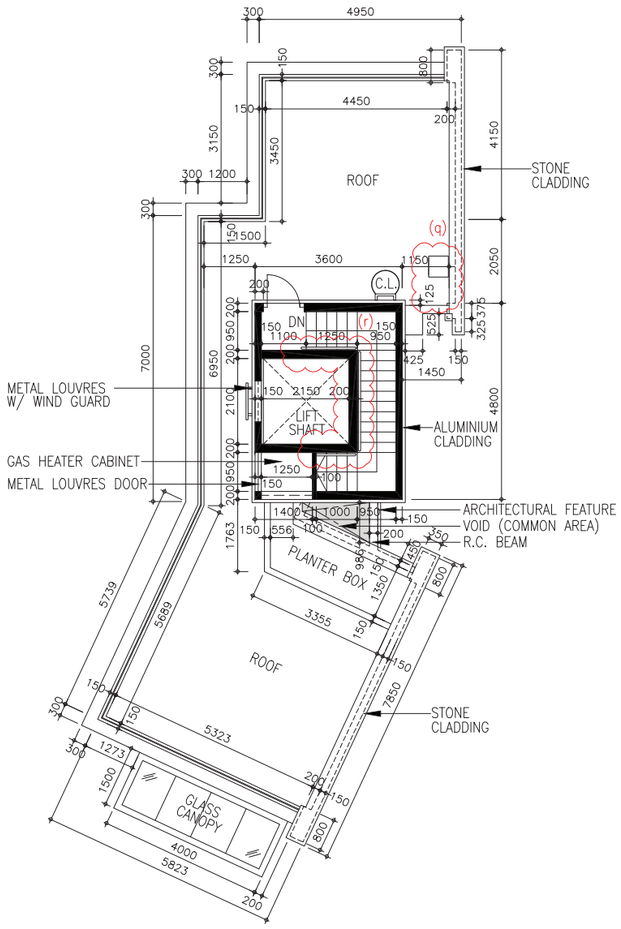

ROOF PLAN
天台平面圖

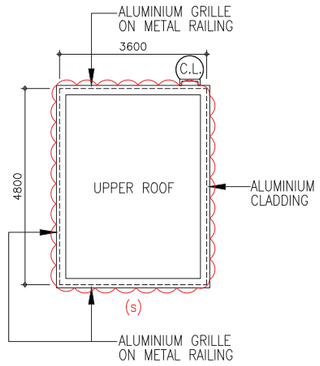

UPPER ROOF PLAN
上層天台平面圖

House 5 has been altered by way of exempted works and minor works under the Buildings Ordinance after completion of the Development. The approximate locations of the alterations are indicated on the latest floor plans and the details of the alterations are set out below (the below numberings refer to the marked alterations on the plan):

q. Relocation of sink.
r. Alteration of handrail design.
s. Alteration of metal railing design.

5 號洋房在發展項目落成後進行獲《建築物條例》豁免及小型工程。該等改動的位置於現狀樓面平面圖中標出。該等改動列出如下(下文編號對應圖中改動編號)：

q. 更改洗手盆位置。
r. 更改扶手設計。
s. 更改金屬欄杆設計。

Note 備註:

- The dimensions of floor plans are all structural dimensions in millimetre.
  平面圖之尺規所列數字為以毫米標示之建築結構尺寸。
- Please refer to page 46 of this sales brochure for legend of the terms and abbreviations shown on the floor plans above.
  以上平面圖所顯示之名詞及簡稱請參閱本售樓說明書第46頁。

0 5M米
Scale 比例

11 FLOOR PLANS OF RESIDENTIAL PROPERTIES IN THE DEVELOPMENT
發展項目的住宅物業的樓面平面圖

HOUSE 6
6 號洋房

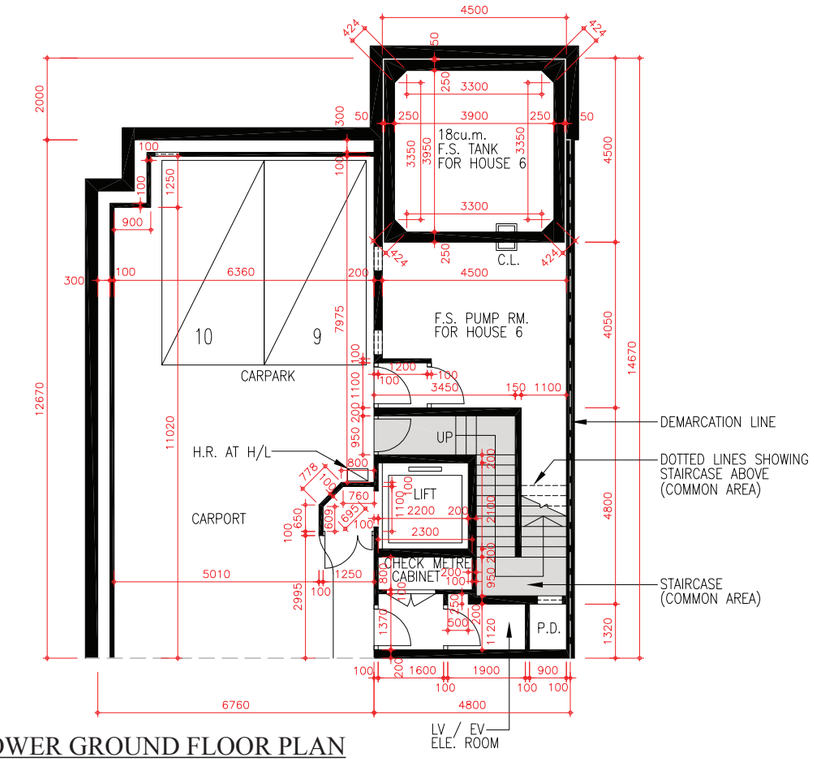

LOWER GROUND FLOOR PLAN
地下低層平面圖

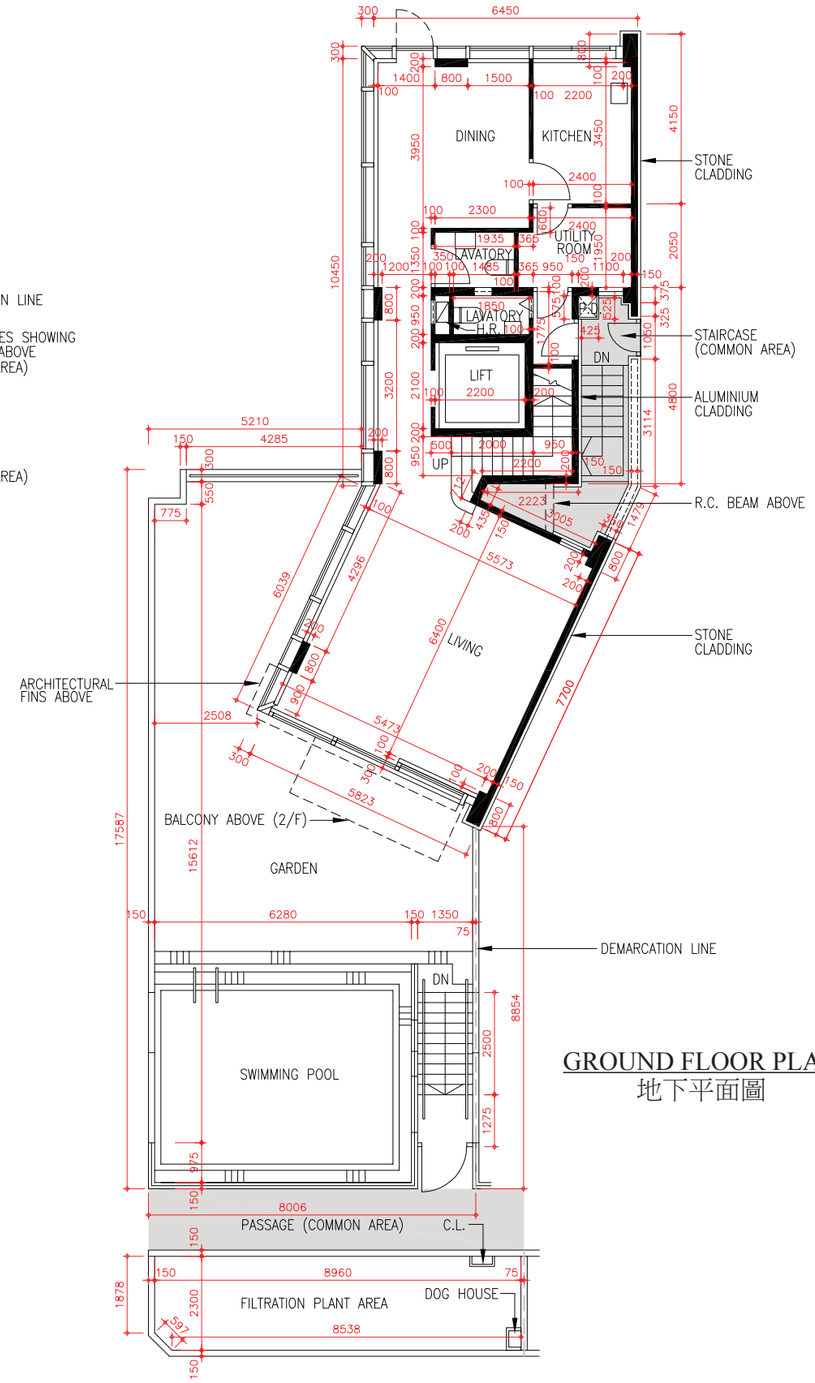

GROUND FLOOR PLAN
地下平面圖

N

0 5M米
Scale 比例

Floor 樓層	Thickness of Floor Slabs (Excluding Plaster) of House 6 (mm) 6 號洋房的樓板 (不包括灰泥) 的厚度 (毫米)	Floor-to-Floor Height of House 6 (m) 6 號洋房 層與層之間的高度 (米)
LG/F 地下低層	250	4.0
G/F 地下	550	4.5
1/F 一樓	150	3.3
2/F 二樓	150	3.5
R/F 天台	150	3.0
UPPER R/F 上層天台	N/A 不適用	N/A 不適用

The internal areas of the residential properties on the upper floors will generally be slightly larger than those on the lower floors because of the reducing thickness of the structural walls on the upper floors.
因住宅物業的較高樓層的結構牆的厚度遞減，較高樓層的內部面積，一般比較低樓層的內部面積稍大。

Note 備註:

- The dimensions of floor plans are all structural dimensions in millimetre.
  平面圖之尺規所列數字為以毫米標示之建築結構尺寸。
- Please refer to page 46 of this sales brochure for legend of the terms and abbreviations shown on the floor plans above.
  以上平面圖所顯示之名詞及簡稱請參閱本售樓說明書第46頁。

11 | FLOOR PLANS OF RESIDENTIAL PROPERTIES IN THE DEVELOPMENT
發展項目的住宅物業的樓面平面圖

LATEST FLOOR PLAN
現狀樓面平面圖

HOUSE 6
6 號洋房

House 6 has been altered by way of exempted works and minor works under the Buildings Ordinance after completion of the Development. The approximate locations of the alterations are indicated on the latest floor plans and the details of the alterations are set out below (the below numberings refer to the marked alterations on the plan):

a. Demolition of lift lobby.
b. Alteration of handrail design, addition of new metal door and threshold.
c. Relocation of hose reel and erection of new hose reel cabinet.
d. Erection of new non-structural partition.
e. Relocation of sink.
f. Removal of louvre on wall.
g. Alteration of handrail design.
g(a). Addition of new stone floor paving in garden.
g(b). Addition of new roller shutter.

6 號洋房在發展項目落成後進行獲《建築物條例》豁免及小型工程。該等改動的位置於現狀樓面平面圖中標出。該等改動列出如下(下文編號對應圖中改動編號)：

a. 拆除電梯大堂。
b. 更改扶手設計、加建新金屬門及門檻。
c. 更改消防喉轆位置及豎立新消防喉轆櫃。
d. 豎立新非結構側板。
e. 更改洗手盆位置。
f. 移除牆上百葉。
g. 更改扶手設計。
g(a). 加建花園新石鋪地台。
g(b). 加建新捲閘。

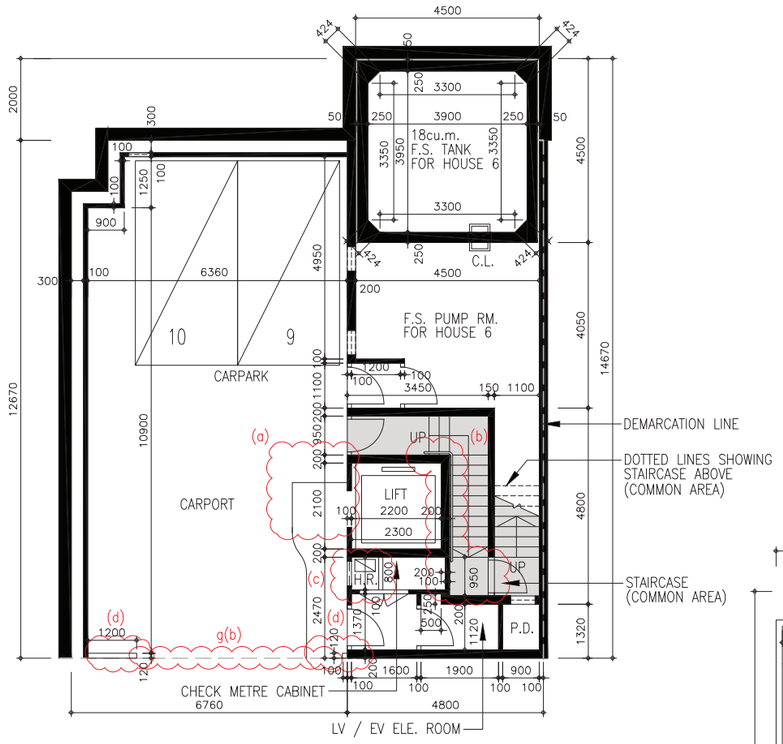

LOWER GROUND FLOOR PLAN
地下低層平面圖

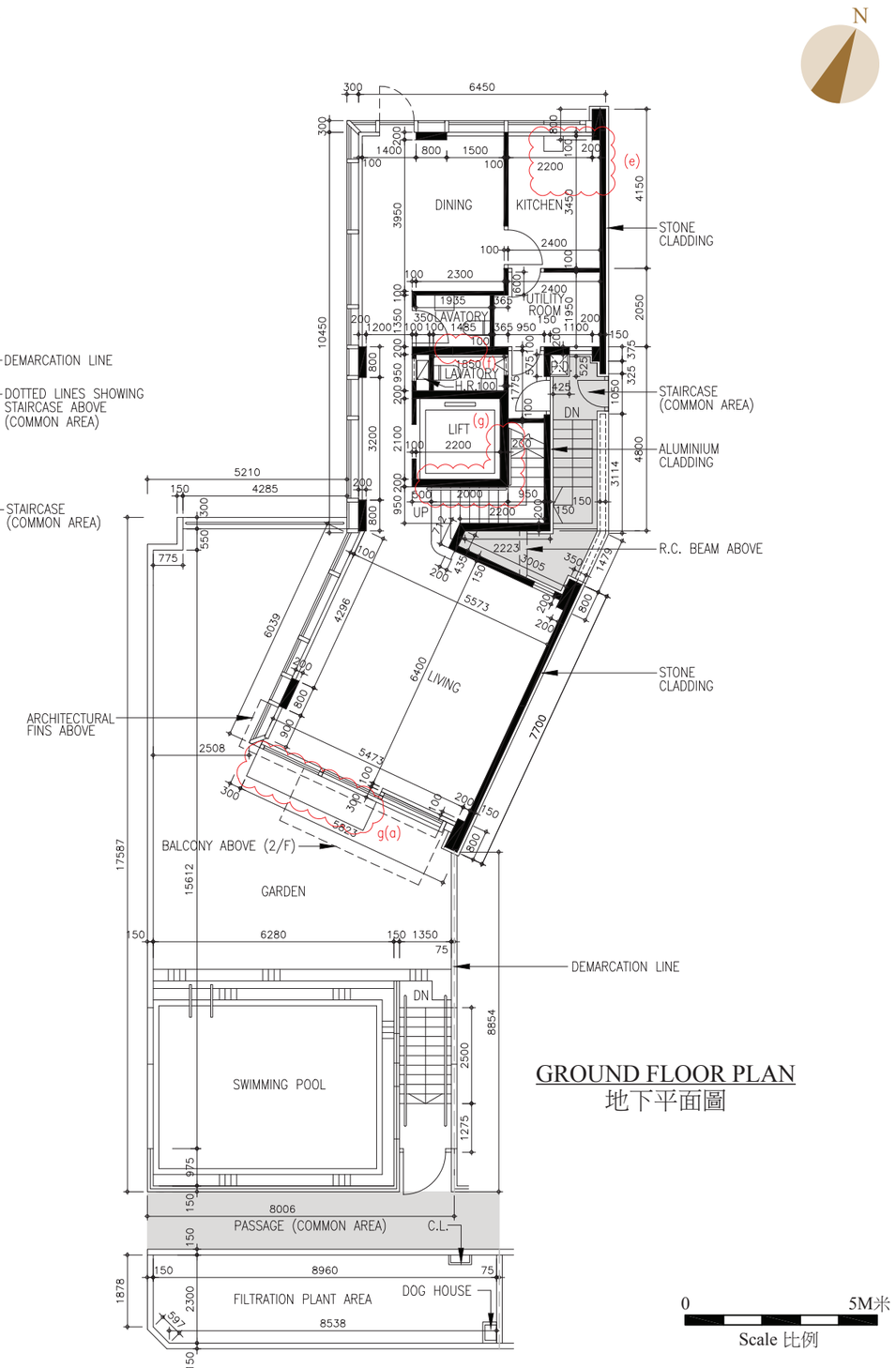

GROUND FLOOR PLAN
地下平面圖

Note 備註:

- The dimensions of floor plans are all structural dimensions in millimetre.
  平面圖之尺規所列數字為以毫米標示之建築結構尺寸。
- Please refer to page 46 of this sales brochure for legend of the terms and abbreviations shown on the floor plans above.
  以上平面圖所顯示之名詞及簡稱請參閱本售樓說明書第46頁。

11 FLOOR PLANS OF RESIDENTIAL PROPERTIES IN THE DEVELOPMENT
發展項目的住宅物業的樓面平面圖

HOUSE 6
6 號洋房

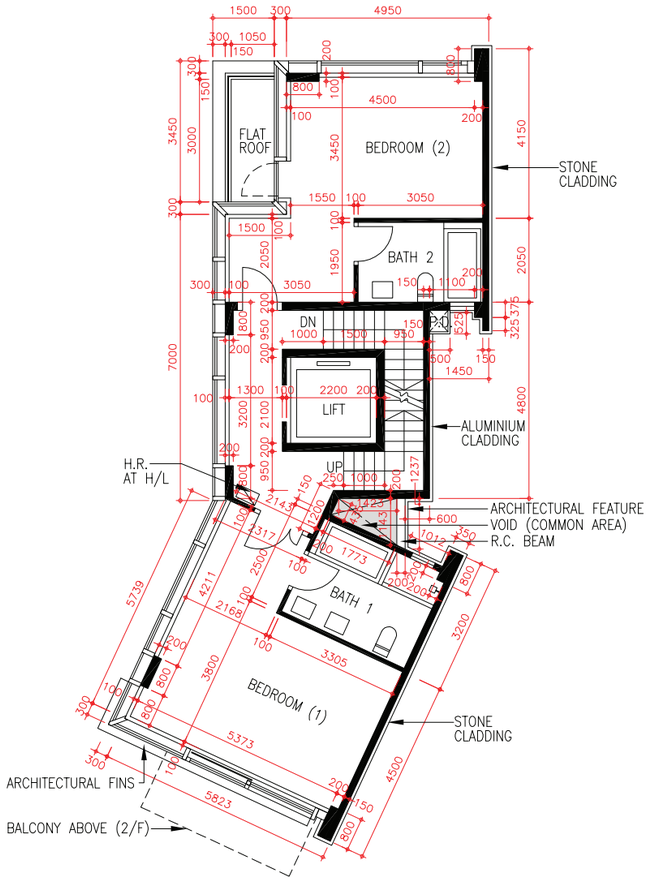

FIRST FLOOR PLAN
一樓平面圖

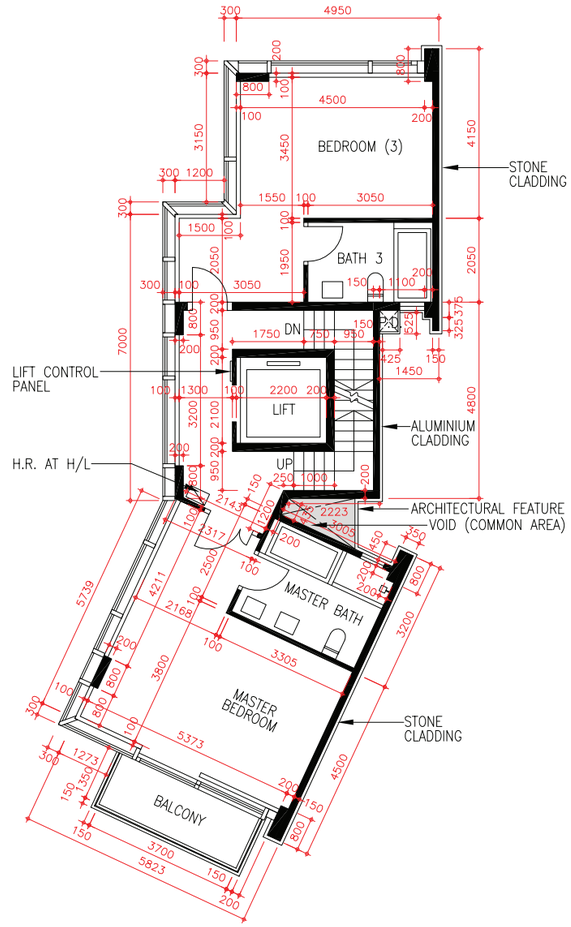

SECOND FLOOR PLAN
二樓平面圖

Note 備註:

- The dimensions of floor plans are all structural dimensions in millimetre.
  平面圖之尺規所列數字為以毫米標示之建築結構尺寸。
- Please refer to page 46 of this sales brochure for legend of the terms and abbreviations shown on the floor plans above.
  以上平面圖所顯示之名詞及簡稱請參閱本售樓說明書第46頁。

0 5M米
Scale 比例

11 FLOOR PLANS OF RESIDENTIAL PROPERTIES IN THE DEVELOPMENT
發展項目的住宅物業的樓面平面圖

LATEST FLOOR PLAN
現狀樓面平面圖

HOUSE 6
6 號洋房

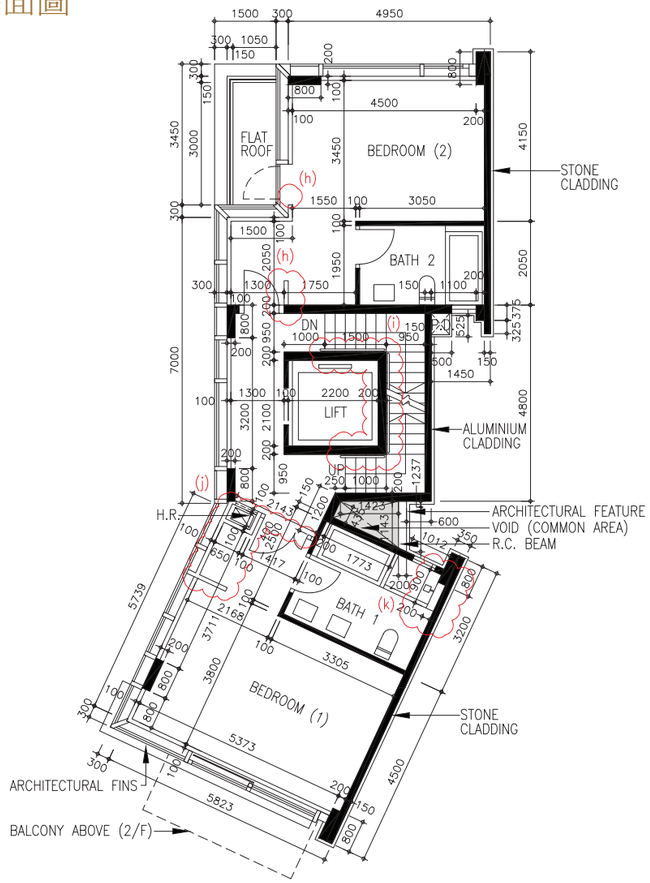

FIRST FLOOR PLAN
一樓平面圖

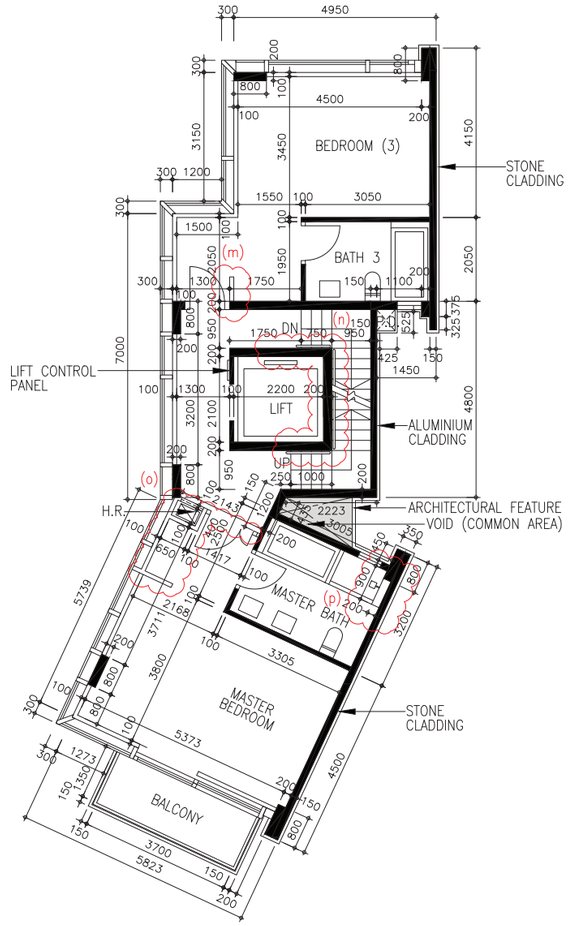

SECOND FLOOR PLAN
二樓平面圖

House 6 has been altered by way of exempted works and minor works under the Buildings Ordinance after completion of the Development. The approximate locations of the alterations are indicated on the latest floor plans and the details of the alterations are set out below (the below numberings refer to the marked alterations on the plan):

h. Erection of new closet partition and removal of a part of concrete curb.
i. Alteration of handrail design.
j. Relocation of hose reel, removal of partition wall, erection of new closet partition and new hose reel cabinet.
k. Addition of new furring wall and relocation of shower mixer for shower cubicle.
m. Erection of new closet partition.
n. Alteration of handrail design.
o. Relocation of hose reel, removal of partition wall, erection of new closet partition and new hose reel cabinet.
p. Addition of new furring wall and relocation of shower mixer for shower cubicle.

6 號洋房在發展項目落成後進行獲《建築物條例》豁免及小型工程。該等改動的位置於現狀樓面平面圖中標出。該等改動列出如下(下文編號對應圖中改動編號)：

h. 豎立新衣櫃側板及移除部分混凝土壆。
i. 更改扶手設計。
j. 更改消防喉轆位置、移除分隔牆、豎立新衣櫃側板及新消防喉轆櫃。
k. 加建新填充牆及更改淋浴間花灑水龍頭位置。
m. 豎立新衣櫃側板。
n. 更改扶手設計。
o. 更改消防喉轆位置、移除分隔牆、豎立新衣櫃側板及新消防喉轆櫃。
p. 加建新填充牆及更改淋浴間花灑水龍頭位置。

Note 備註:

- The dimensions of floor plans are all structural dimensions in millimetre.
  平面圖之尺規所列數字為以毫米標示之建築結構尺寸。
- Please refer to page 46 of this sales brochure for legend of the terms and abbreviations shown on the floor plans above.
  以上平面圖所顯示之名詞及簡稱請參閱本售樓說明書第46頁。

0 5M米
Scale 比例

11 FLOOR PLANS OF RESIDENTIAL PROPERTIES IN THE DEVELOPMENT
發展項目的住宅物業的樓面平面圖

HOUSE 6
6 號洋房

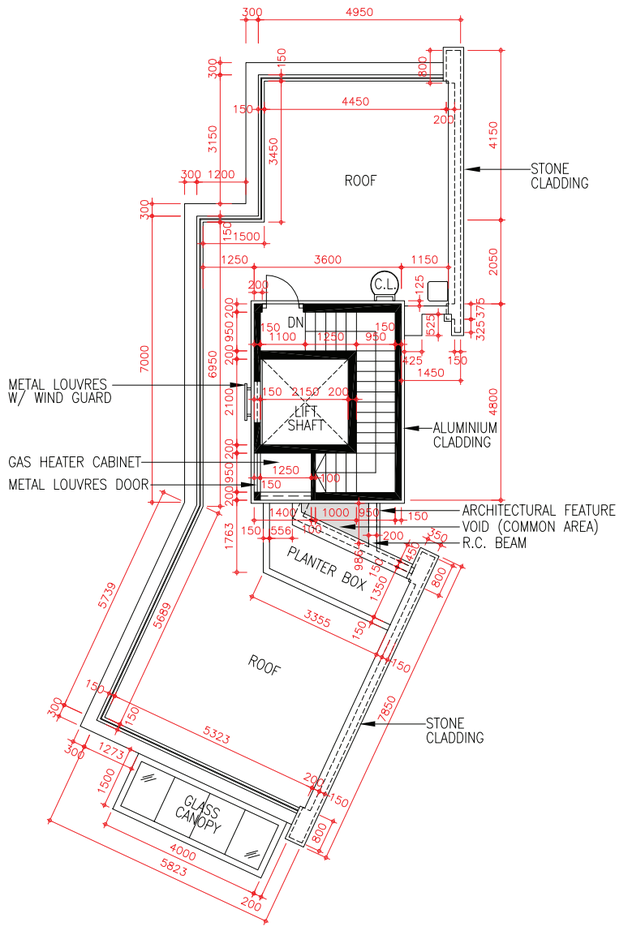

ROOF PLAN
天台平面圖

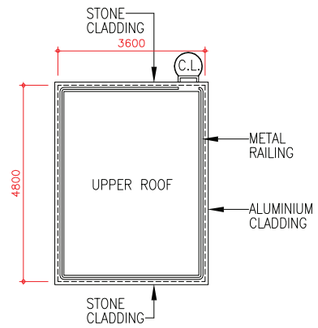

UPPER ROOF PLAN
上層天台平面圖

Note 備註:

- The dimensions of floor plans are all structural dimensions in millimetre.
  平面圖之尺規所列數字為以毫米標示之建築結構尺寸。
- Please refer to page 46 of this sales brochure for legend of the terms and abbreviations shown on the floor plans above.
  以上平面圖所顯示之名詞及簡稱請參閱本售樓說明書第46頁。

0 5M米
Scale 比例

11 FLOOR PLANS OF RESIDENTIAL PROPERTIES IN THE DEVELOPMENT
發展項目的住宅物業的樓面平面圖

LATEST FLOOR PLAN
現狀樓面平面圖

HOUSE 6
6 號洋房

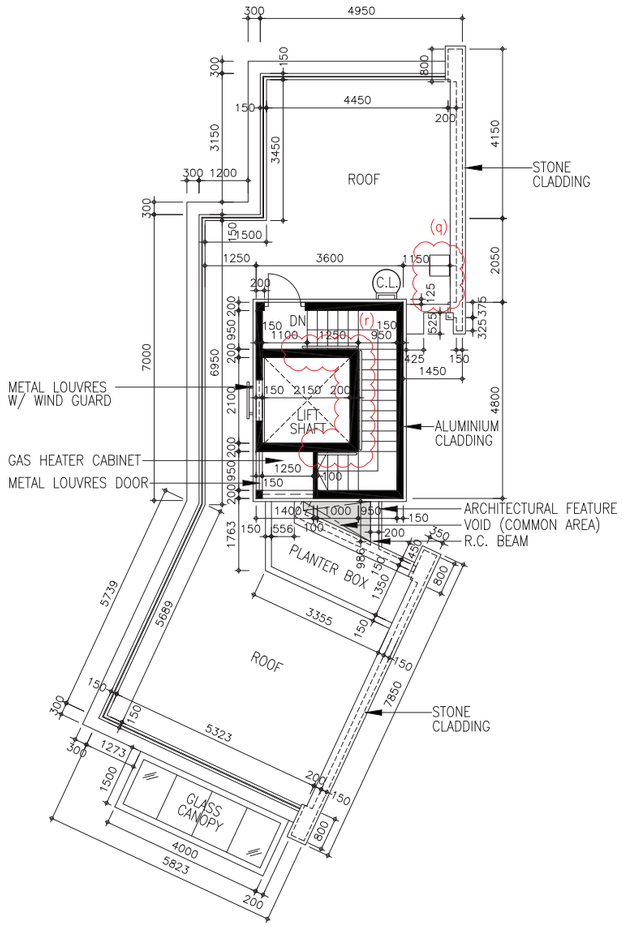

ROOF PLAN
天台平面圖

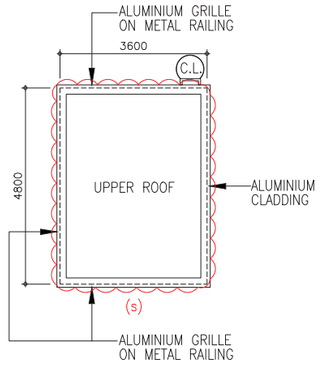

UPPER ROOF PLAN
上層天台平面圖

House 6 has been altered by way of exempted works and minor works under the Buildings Ordinance after completion of the Development. The approximate locations of the alterations are indicated on the latest floor plans and the details of the alterations are set out below (the below numberings refer to the marked alterations on the plan):

q. Relocation of sink.
r. Alteration of handrail design.
s. Alteration of metal railing design.

6 號洋房在發展項目落成後進行獲《建築物條例》豁免及小型工程。該等改動的位置於現狀樓面平面圖中標出。該等改動列出如下(下文編號對應圖中改動編號)：

q. 更改洗手盆位置。
r. 更改扶手設計。
s. 更改金屬欄杆設計。

Note 備註:

- The dimensions of floor plans are all structural dimensions in millimetre.
  平面圖之尺規所列數字為以毫米標示之建築結構尺寸。
- Please refer to page 46 of this sales brochure for legend of the terms and abbreviations shown on the floor plans above.
  以上平面圖所顯示之名詞及簡稱請參閱本售樓說明書第46頁。

0 5M米
Scale 比例

11 FLOOR PLANS OF RESIDENTIAL PROPERTIES IN THE DEVELOPMENT
發展項目的住宅物業的樓面平面圖

Legend of Terms and Abbreviations on Floor Plans :
樓面平面圖中的名稱及簡稱 :

ALUMINIUM CLADDING	鋁質金屬板
ALUMINIUM GRILLE ON METAL RAILING	鋁質金屬欄格
ARCHITECTURAL FEATURE	建築特徵
ARCHITECTURAL FINS	建築鰭
ARCHITECTURAL FINS ABOVE	建築鰭置上
BALCONY	露台
BALCONY ABOVE	露台置上
BATH = BATHROOM	浴室
BEDROOM	睡房
CARPARK	停車位
CARPORT	車庫
C.L. = CAT LADDER	豎梯
CHECK METER CABINET	電錶櫃
COMMON AREA	公用地方
DEMARCATION LINE	分界線
DINING = DINING ROOM	飯廳
DN = DOWN	向下
DOG HOUSE	電機管道
DOTTED LINES SHOWING STAIRCASE ABOVE (COMMON AREA)	虛線顯示樓梯置上(公用地方)
FILTRATION PLANT AREA	濾水機位置
FLAT ROOF	平台
F.S. PUMP RM. = FIRE SERVICE PUMP ROOM	消防泵房
GARDEN	花園
GAS HEATER CABINET	煤氣熱水爐櫃
GLASS CANOPY	玻璃簷篷
GUEST LAVATORY	客人洗手間
HOUSE	洋房
H.R. = HOSE REEL	消防喉轆
H.R. AT H/L = HOSE REEL AT HIGH LEVEL	消防喉轆於高處
KITCHEN	廚房
LAVATORY	洗手間
LIFT	升降機
LIFT CONTROL PANEL	升降機控制板
LIFT SHAFT	升降機通風井
LIVING = LIVING ROOM	客廳
LIVING & DINING = LIVING & DINING ROOM	客飯廳
LV / EV ELE. ROOM = LOW VOLTAGE / EXTRA-LOW VOLTAGE ELECTRIC ROOM	低壓/電動車掣房
MASTER BATH = MASTER BATHROOM	主人浴室
MASTER BEDROOM	主人睡房
METAL LOUVRES DOOR	金屬百葉門
METAL LOUVRES W / WIND GUARD	金屬百葉風檔
METAL RAILING	金屬欄
PASSAGE	通道
P.D. = PIPE DUCT	管道槽
PLANTER BOX	花槽
R.C. BEAM = REINFORCEMENT CONCRETE BEAM	加固混凝土橫樑
R.C. BEAM ABOVE = REINFORCEMENT CONCRETE BEAM ABOVE	加固混凝土橫樑置上
ROOF	天台
STAIRCASE	樓梯
STONE CLADDING	石質覆蓋板
SWIMMING POOL	泳池
UP	向上
UPPER ROOF	上層天台
UTILITY ROOM	工作間
VOID	天井
WALL	牆
18cu. m. F.S. TANK = 18 CUBIC METER FIRE SERVICE TANK	18立方米消防水箱